HAMILTON COUNTY WATER &
WASTEWATER TREATMENT AUTHORITY

1250 Market Street, Suite 3050, Chattanooga, TN 37402-2713
Phone (423) 209-7842
Fax (423) 209-7843

STANDARD DETAILS & SPECIFICATIONS FOR THE CONSTRUCTION OF SANITARY SEWERS

MARK C. HARRISON
REGISTERED ENGINEER
AGRICULTURE
7-20-16
COMMERCE
No. 00107426
STATE OF TENNESSEE

Effective Date: July 20, 2016
Expiration Date: July 20, 2019
TN0021211, SOP-13025, SOP-15004

"These Standard Details and Specifications are to be used for Hamilton County Water & Wastewater Treatment Authority (WWTA) projects, and are not intended to be used outside WWTA jurisdiction."

HAMILTON COUNTY WATER &
WASTEWATER TREATMENT AUTHORITY

1250 Market Street, Suite 3050, Chattanooga, TN 37402-2713
Phone (423) 209-7842
Fax (423) 209-7843

STANDARD DETAILS & SPECIFICATIONS FOR THE CONSTRUCTION OF SANITARY SEWERS

MARK C. HARRISON
REGISTERED ENGINEER
AGRICULTURE
COMMERCE
No. 0010712
STATE OF TENNESSEE

6-21-12

Effective Date:
Expiration Date:
TN0021211, SO-13025, SOP-15004

WWTA STANDARD DETAILS & SPECIFICATIONS FOR THE CONSTRUCTION OF STANITARY SEWERS

TABLE OF CONTENTS

SECTION	TITLE	NO. OF PAGES
INTRODUCTION		
GENERAL CONDITIONS		
DIVISION 1 - GENERAL REQUIREMENTS		
01090	Reference Standards and Abbreviations	2
01300	Submittals	3
01610	Transportation and Handling	1
01615	Storage and Protection	2
01740	Guarantees and Warranties	2
DIVISION 2 - SITEWORK		
02220	Earthwork	15
02270	Slope Protection and Erosion Control	7
02500	Paving and Surfacing	8
02546	STEP Pumping Assemblies	5
02605	Manholes	8
02731	Polyvinyl Chloride (PVC) Gravity Sewer and Service Pipe	8
02732	Polyvinyl Chloride (PVC) Pressure Pipe	8
02733	Polyvinyl Chloride (PVC) Pressure Pipe for Low Pressure Applications	9
02830	Chain Link Fences and Gates	4
02921	Topsoil	3
02933	Seeding	7
02951	Railroad and Highway Crossings	5
DIVISION 3 - CONCRETE		
03200	Cast-in-Place Concrete Reinforcement	1
03300	Cast-in-Place Concrete	5
DIVISION 11 - EQUIPMENT		
11312	Sanitary Sewage Pump Stations	17
11314	Simplex Grinder Pump Sewage Stations	9
DIVISION 15 - MECHANICAL		
15062	Ductile Iron Piping, Ductile Iron and Cast Iron Fittings	11
15064	High Density Polyethylene Pipe	5
15101	Valves	6
STANDARD DETAILS		
	See STANDARD DETAILS TABLE OF CONTENTS	

A GREASE TRAPS/INTERCEPTORS SHALL BE INSTALLED IN ASSOCIATION WITH COMMERCIAL BUILDINGS, IN ACCORDANCE WITH THE HCWWTA FOG POLICY

B. GREASE TRAPS SHALL BE CONSTRUCTED TO ENSURE THAT BOTH THE INLET AND OUTLET ARE PROPERLY SUBMERGED TO TRAP GREASE, AND THAT THE DISTANCE BETWEEN THE INLET AND OUTLET IS SUFFICIENT TO ALLOW SEPARATION OF GREASE SO THAT GREASE SOLIDS WILL NOT ESCAPE THROUGH THE OUTLET

C FLOW THAT DOES NOT REQUIRE TREATMENT OR SEPARATION SHALL NOT DISCHARGE INTO THE GREASE TRAP OR SEPARATOR

D IF PROHIBITED GREASE, SAND, GRAVEL AND OTHER POLLUTANTS ENTER THE PUBLIC SEWER, THE SUPERINTENDENT WILL PERFORM SUCH MAINTENANCE AND REPAIR TO THE SEWER AND CHARGE THE COST THEREOF TO THE PROPERTY OWNER

E THE DISTANCE "X" BETWEEN THE BOTTOM OF THE "AIR GAP" AND THE "FLUID LEVEL" SHOULD NOT EXCEED THE OUTLET PIPE DIAMETER

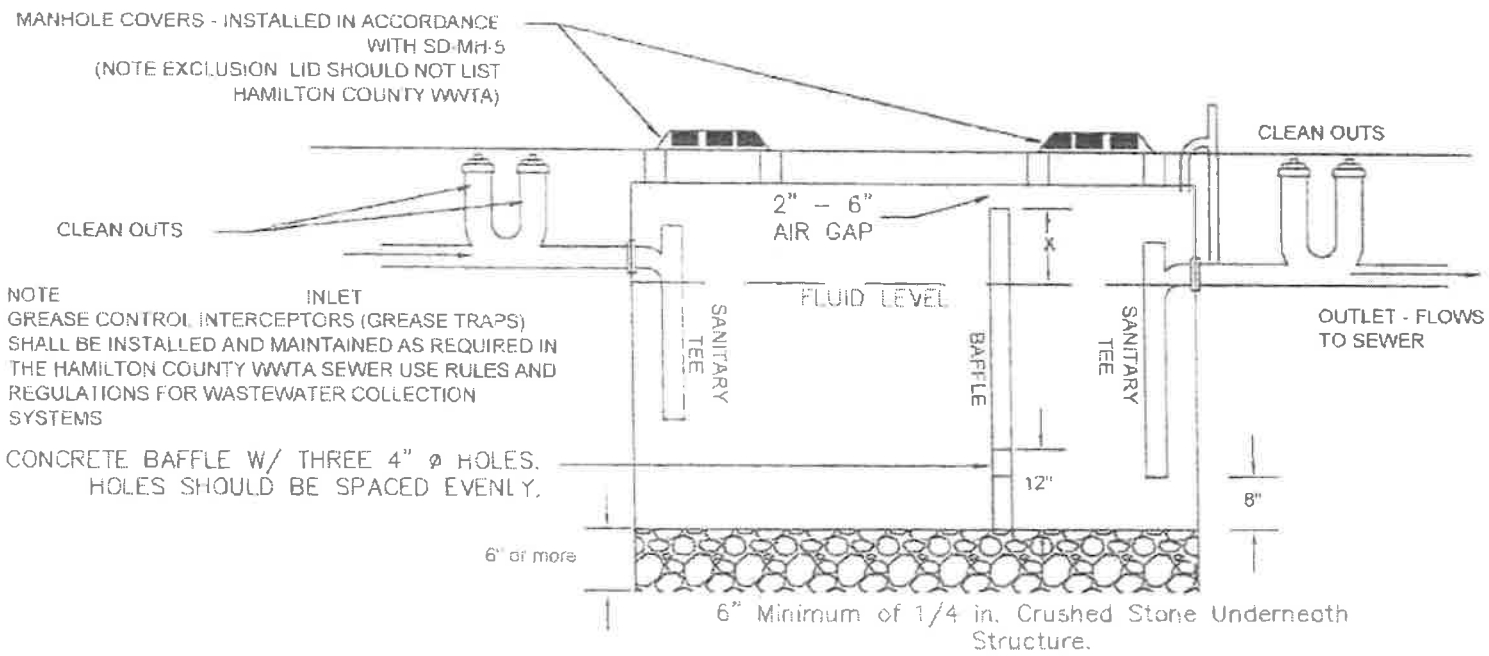

GREASE CONTROL INTERCEPTOR - DETAIL

HAMILTON COUNTY WATER & WASTEWATER TREATMENT AUTHORITY

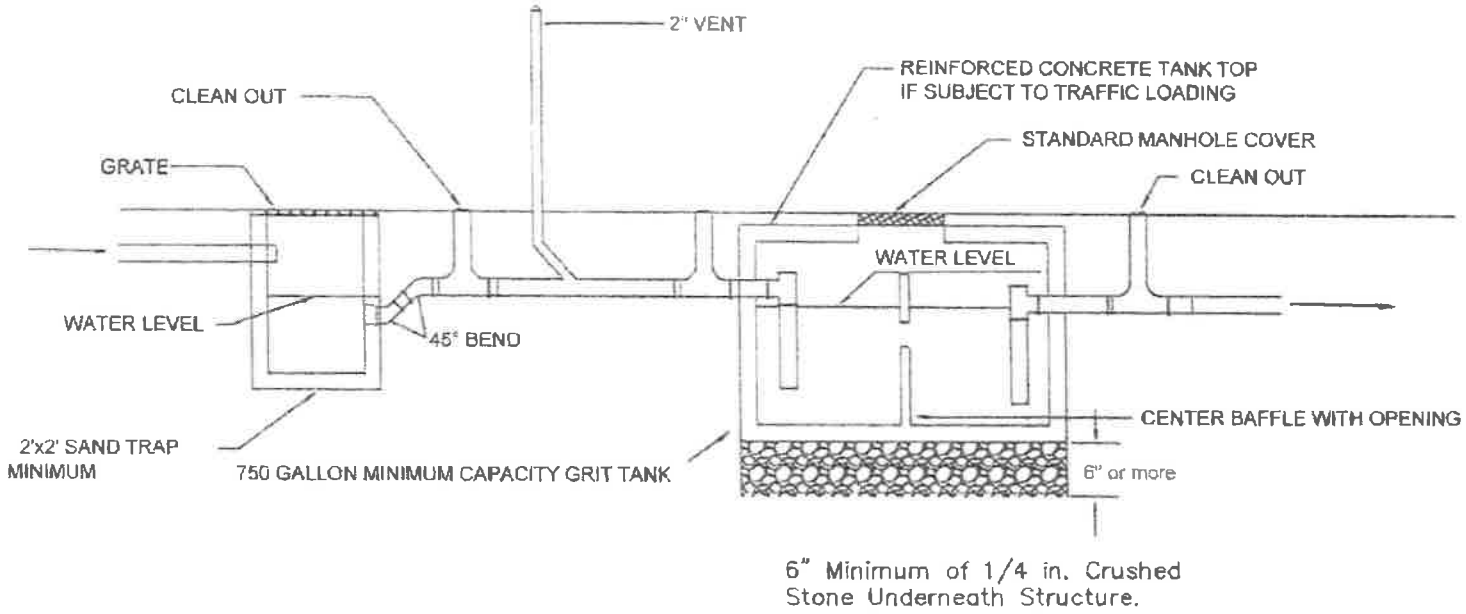

STANDARD SAND TRAP (GRIT TRAP)

HAMILTON COUNTY WATER & WASTEWATER TREATMENT AUTHORITY

SC-MISC-3

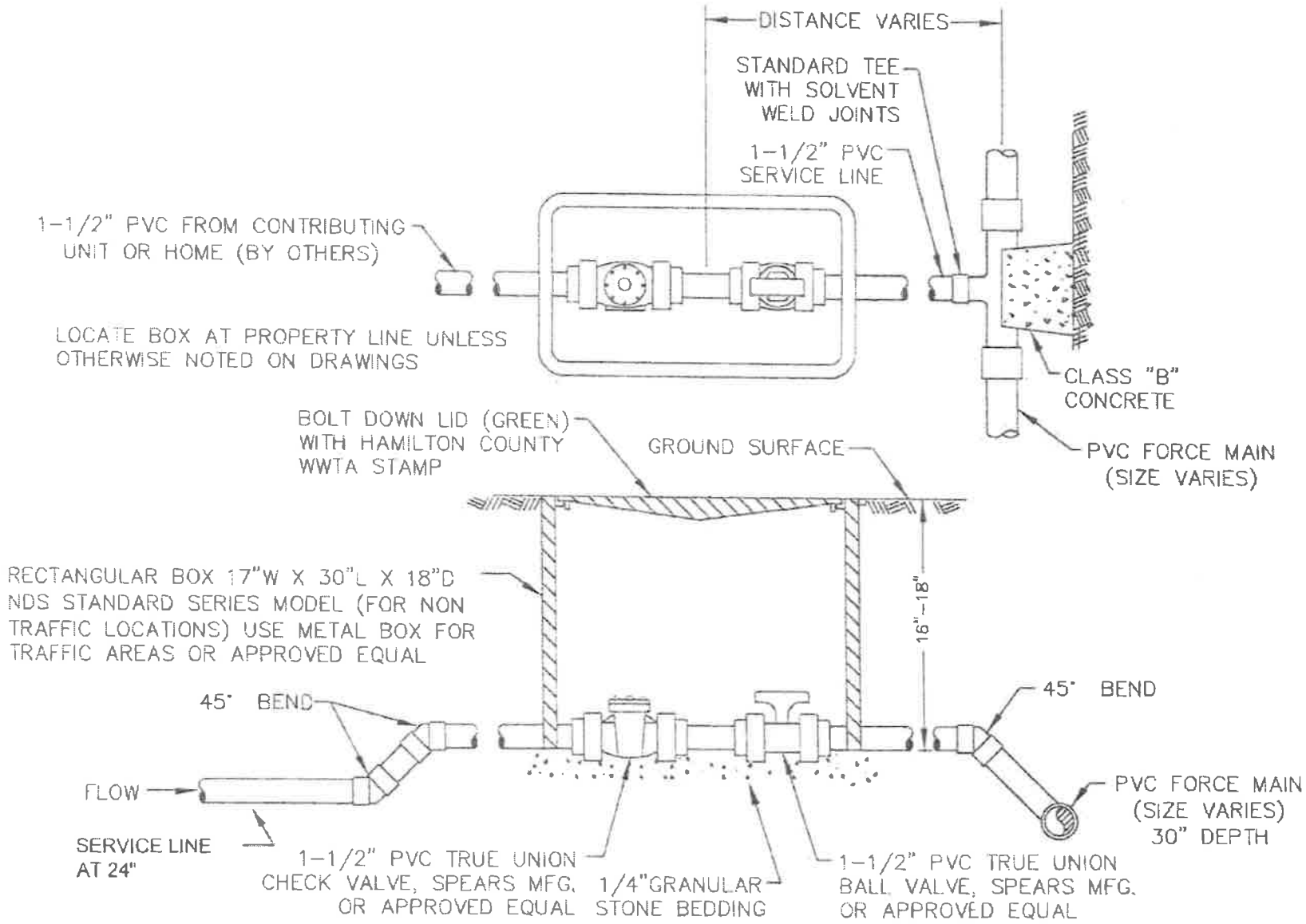

LOW PRESSURE CONNECTION BOX

HAMILTON COUNTY WATER & WASTEWATER TREATMENT AUTHORITY

SD-1 P-1

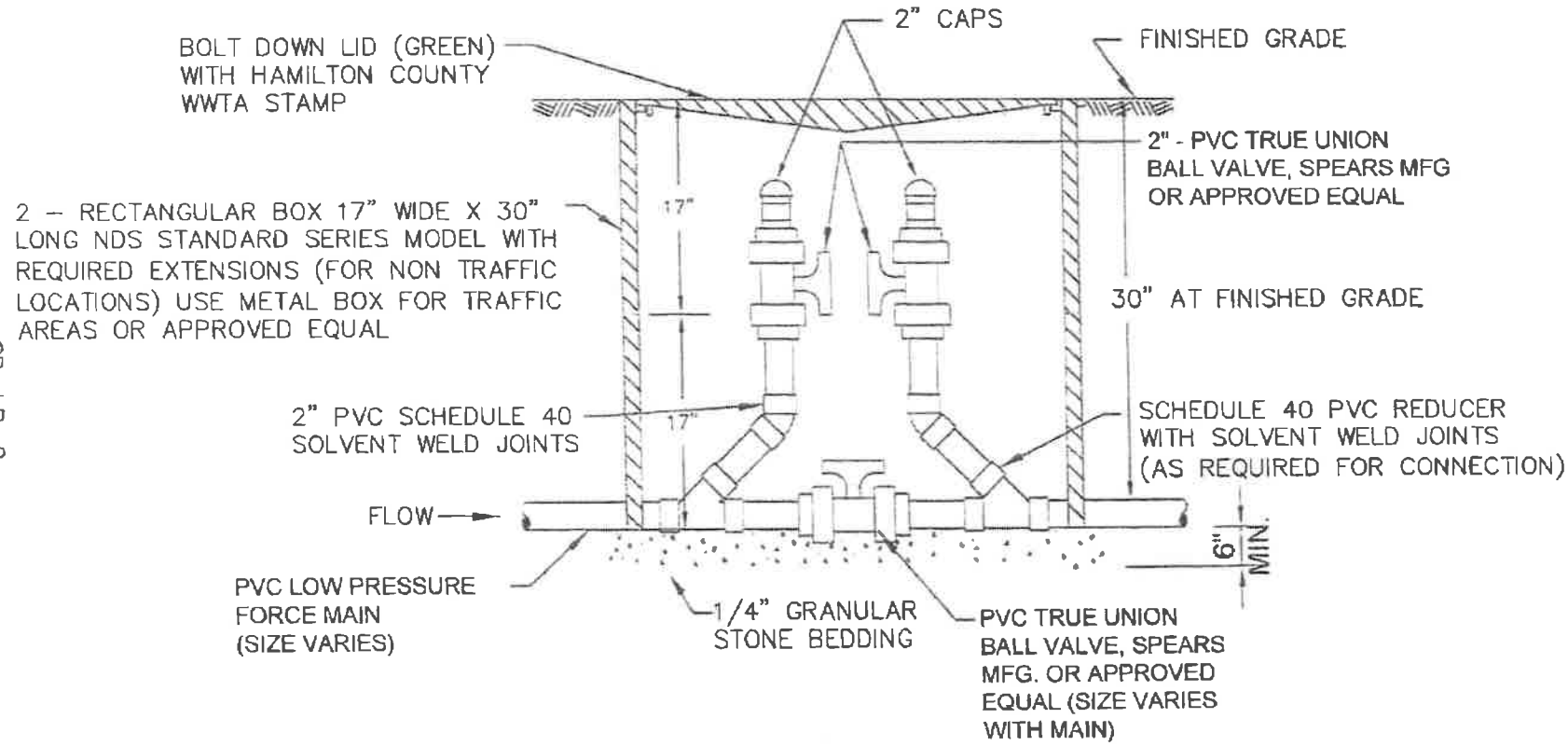

LOW PRESSURE INLINE CLEANOUT

HAMILTON COUNTY WATER & WASTEWATER TREATMENT AUTHORITY

SD-LP-2

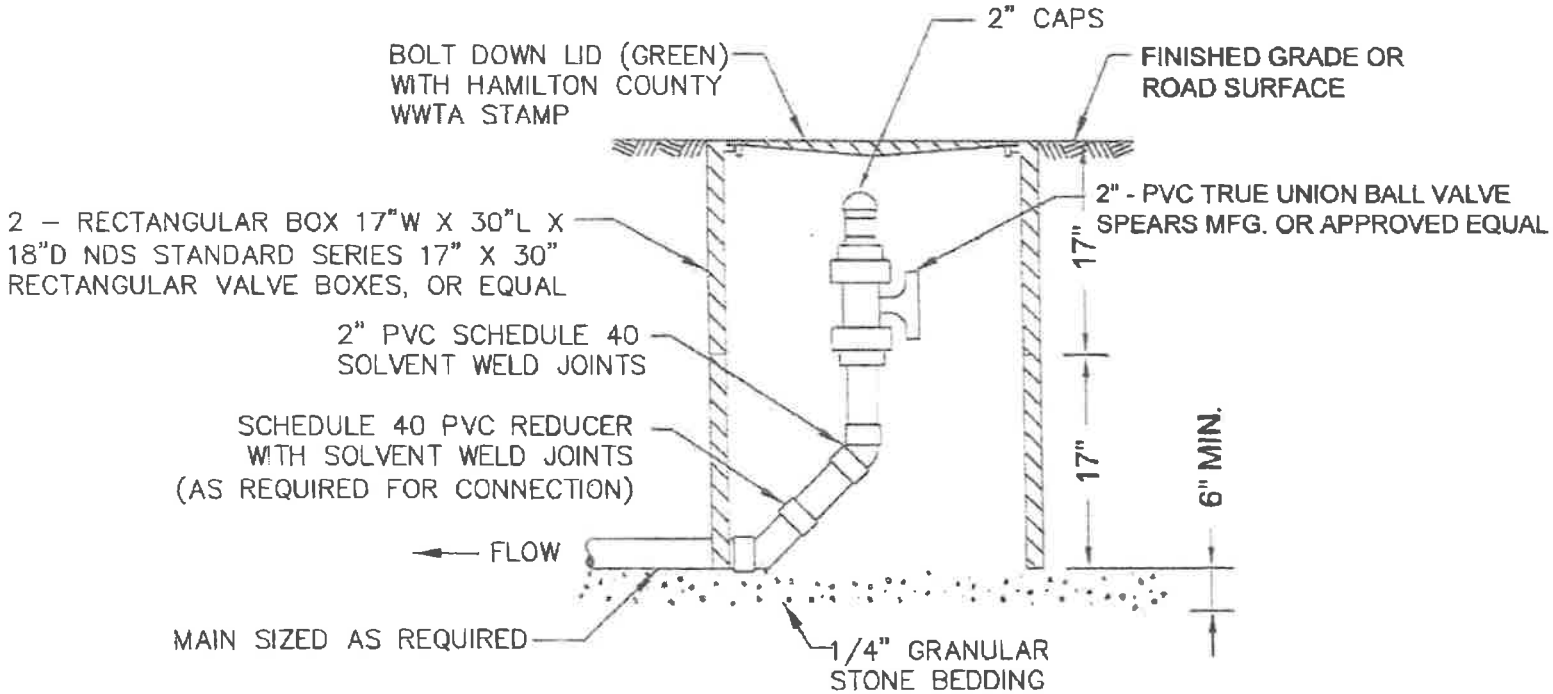

LOW PRESSURE TERMINAL CLEANOUT

HAMILTON COUNTY WATER & WASTEWATER TREATMENT AUTHORITY

SD-LP-3

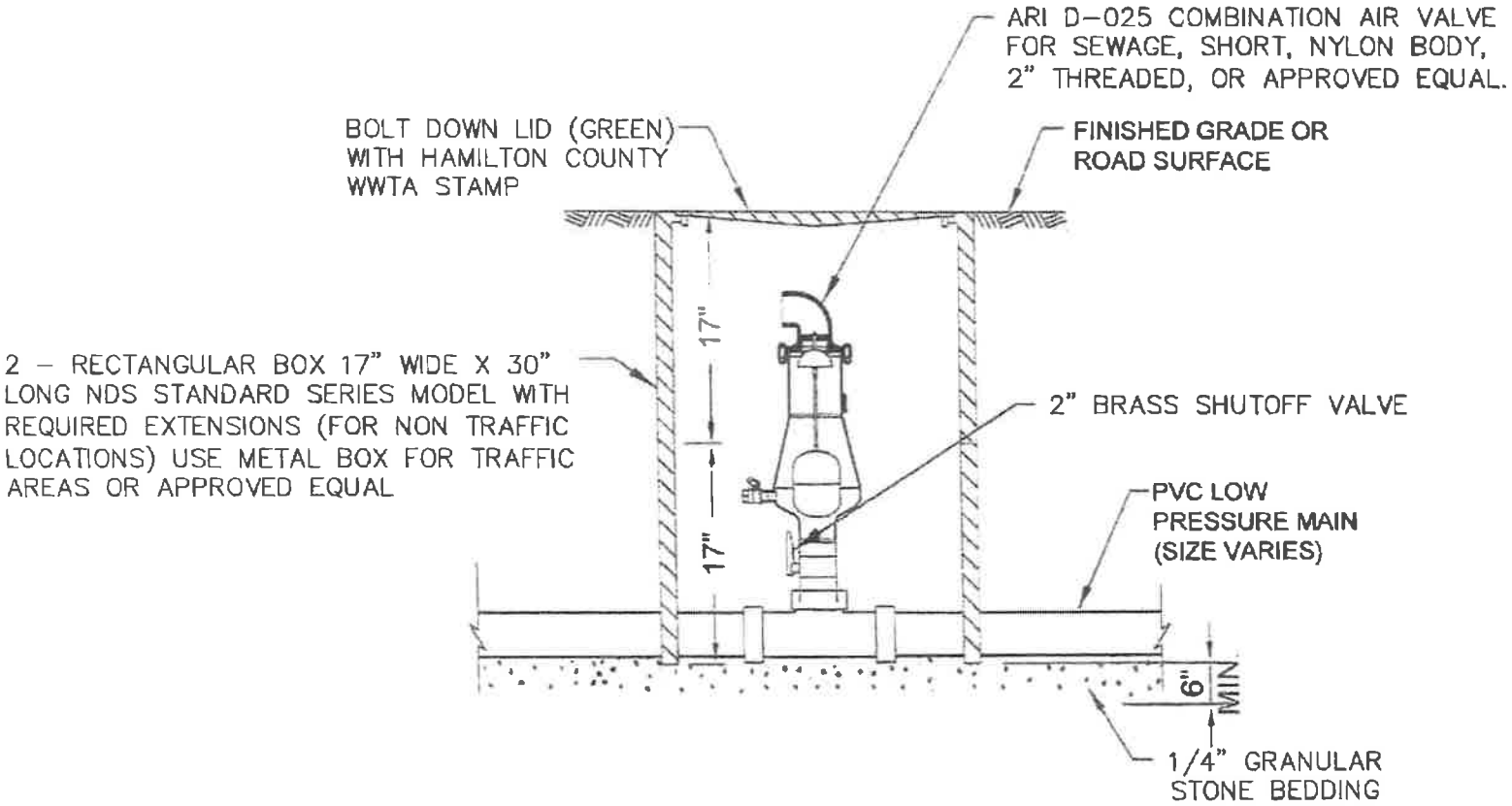

LOW PRESSURE AIR RELEASE VALVE

HAMILTON COUNTY WATER & WASTEWATER TREATMENT AUTHORITY

SD-LP-4

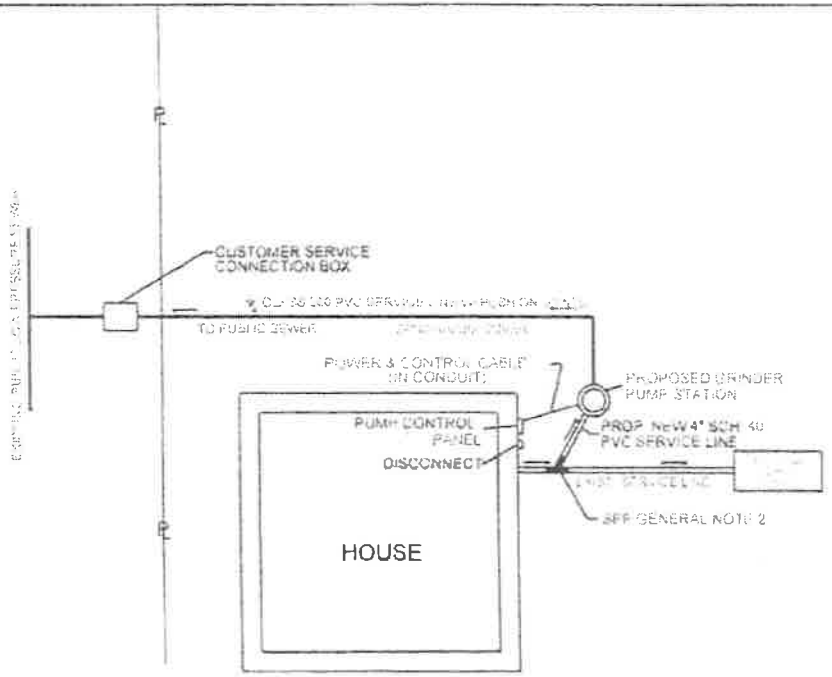

PLAN

GENERAL NOTES

1. INSTALL CONTROL PANEL ON SIDE OF HOUSE IN VIEW OF GRINDER PUMP STATION. INSTALL WITH ELECTRICAL DISCONNECT AND RUN DEDICATED 230 VOLT LINE FROM MAIN BREAKER BOX TO DISCONNECT. INSTALLATION REQUIRES LICENSED ELECTRICIAN AND ELECTRICAL PERMIT.
2. ALTHOUGH NOT RECOMMENDED, IF APPROVED BY WASTEWATER SUPERINTENDANT, HOMEOWNER MAY LEAVE SEPTIC TANK IN SERVICE FOR OVERFLOW DURING POWER OUTAGE OF GRINDER PUMP IN ACCORDANCE WITH WWTA RULES. IF SEPTIC TANK IS ABANDONED, IT SHALL BE PUMPED CLEAN, FILLED WITH CRUSHED STONE OR FLOWABLE FILL AND DISCONNECTED.
3. INSTALLATION BY A PLUMBER OR CONTRACTOR APPROVED BY THE WWTA.
4. LOCATION OF GRINDER PUMP AND CONTROL PANEL TO BE APPROVED BY THE WWTA.
5. PLUMBER SHALL WARRANTY ALL INSTALLATION WORK FOR ONE (1) YEAR AFTER FINAL INSPECTION.

PLUMBER NOTES

1. INSTALLATION MUST COMPLY, IN GENERAL, WITH THE STANDARD PLUMBING CODE PUBLISHED BY THE SOUTHERN BUILDING CODE CONGRESS INTERNATIONAL, LATEST REVISION, AND WWTA REQUIREMENTS.
2. SERVICE CONNECTION BOX (VALVES MUST BE AT A SURFACE GRADE 16" TO 18")
2. GRINDER PUMP SYSTEM SHALL BE PURCHASED FROM OR APPROVED BY THE WWTA.
3. PUMP STATION LOCATION MAY BE RECOMMENDED BY THE HOMEOWNER, BUT FINAL APPROVAL BY THE WWTA.
4. PUMP AND BASIN SHALL BE INSTALLED IN ACCORDANCE WITH THE MANUFACTURE'S PRINTED INSTALLATION MANUAL.
5. GRAVITY SEWER LINES SHALL BE INSTALLED IN ACCORDANCE WITH THE MANUFACTURES PRINTED INSTRUCTION MANUAL AND WWTA SPECIFICATIONS FOR GRAVITY CONSTRUCTION.
6. PUMP DISCHARGE SERVICE LINES SHALL BE 1 1/2" CLASS 200 PVC WITH PUSH ON JOINTS. 45° MAXIMUM ON FITTINGS (NO 90° FITTINGS).
7. DISCHARGE SERVICE LINES SHALL BE INSTALLED WITH A MINIMUM COVER OF 24".
8. GRINDER PUMP SYSTEM AND DISCHARGE SERVICE LINES SHALL BE TESTED AS FOLLOWS:
   a. PRIOR TO BACKFILLING
      - CLOSE ISOLATION BALL VALVE AT PROPERTY LINE
      - FILL PUMP BASIN WITH WATER
      - TURN PUMP ON AND OBSERVE OPERATIONS.
      - OBSERVE DISCHARGE SERVICE LINES FOR LEAKS.
   b. AFTER BACKFILLING
      - CLOSE ISOLATION BALL VALVE AT PROPERTY LINE
      - REMOVE CHECK VALVE AT PROPERTY AND INSTALL PRESSURE GAUGE APPARATUS WITH FLUSHING VALVE
      - FILL PUMP BASIN AND DISCHARGE LINE WITH WATER
      - TURN ON GRINDER PUMP TO PRESSURIZE LINE. CLOSE PUMP STATION ISOLATION VALVE AND TURN PUMP OFF
      - OBSERVE PRESSURE GAUGE FOR SIGNS OF LEAKAGE
9. PLUMBING INSPECTION REQUIRED BY THE WWTA PRIOR TO PLACING SYSTEM IN SERVICE

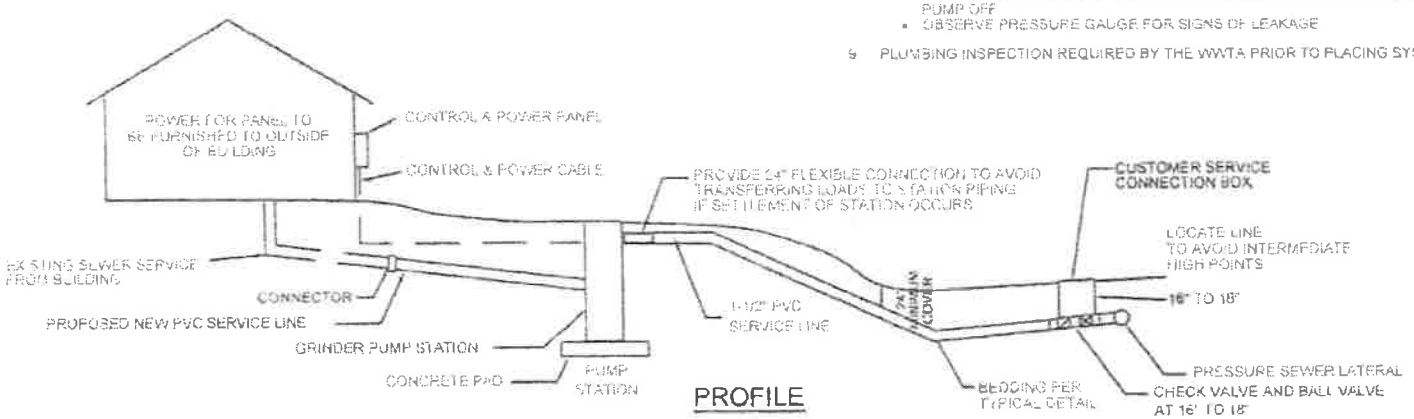

PROFILE

GRINDER PUMP SERVICE INSTALLATION

HAMILTON COUNTY WATER & WASTEWATER TREATMENT AUTHORITY

SD-GP-1

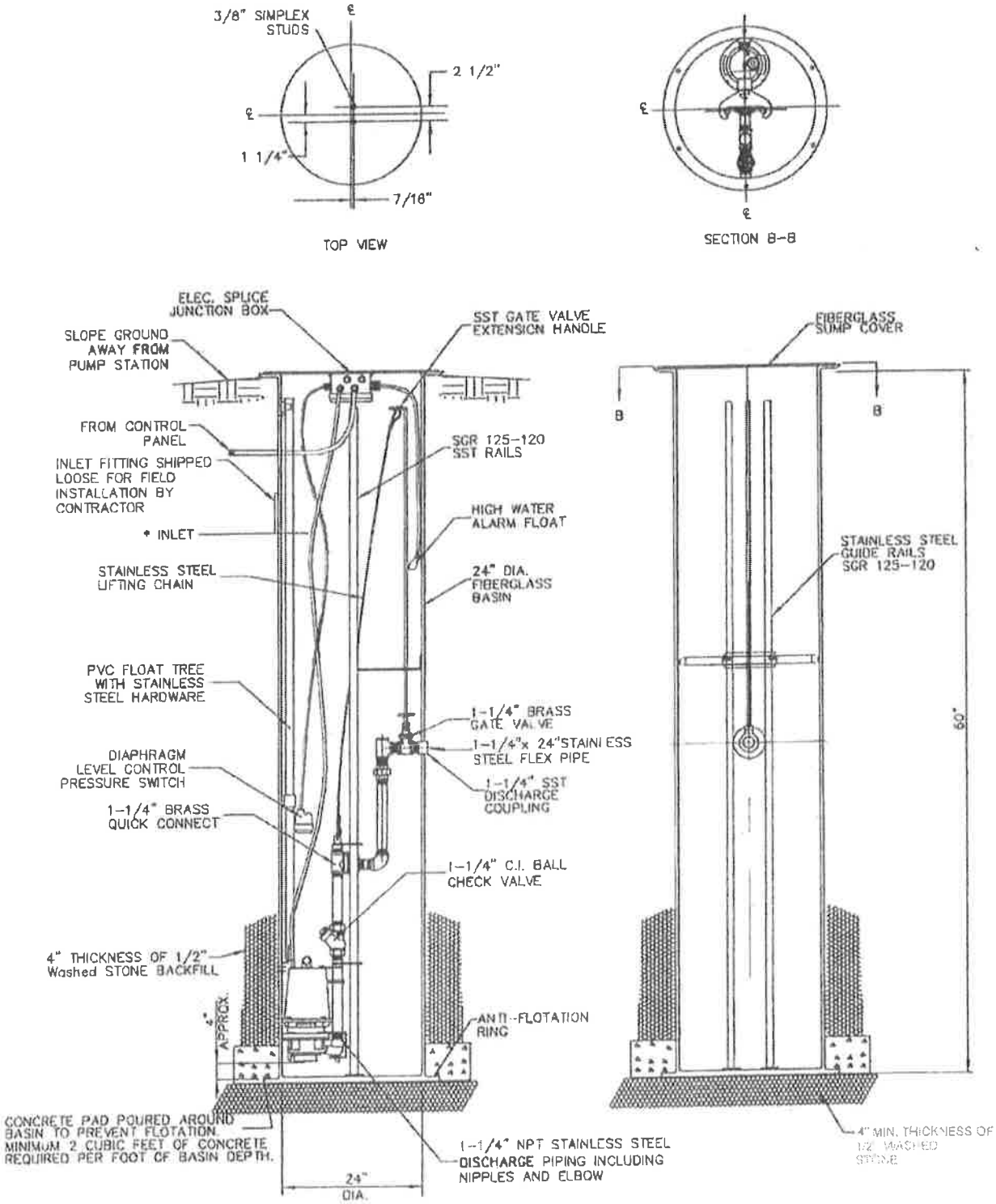

* INLET TO BE MINIMUM OF 36" FROM BOTTOM OF TANK

SIMPLEX GRINDER PUMP STATION

HAMILTON COUNTY WATER & WASTEWATER TREATMENT AUTHORITY

SD-GP-2

1 GRINDER PUMP WIRE
2. DIAPHRAGM PRESSURE SWITCH WIRE
3 FLOAT ALARM WIRE

MUST GO THROUGH "J" BOX ON FIBERGLASS COVER

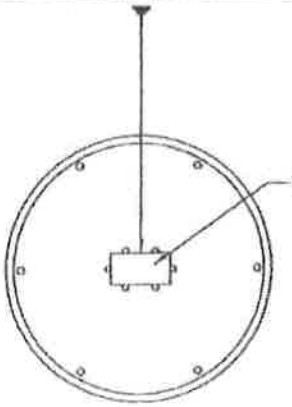

NOTES:

1. GRINDER PUMP WIRE, DIAPHRAGM PRESSURE SWITCH WIRE, AND FLOAT SWITCH WIRE SHALL GO THROUGH THE "J" BOX ON THE FIBERGLASS COVER.
2. THE GRINDER PUMP WIRE SHALL BE SPLICED INSIDE THE "J" BOX, BUT IF THE DIAPHRAGM PRESSURE SWITCH WIRE AND FLOAT SWITCH WIRE ARE LONG ENOUGH TO REACH THE CONTROL PANEL, THEY DO NOT HAVE TO BE SPLICED
3. DIAPHRAGM PRESSURE SWITCH HAS A 1/8" VENT TUBE WITH THE TWO CONTROL WIRES THE DIAPHRAGM PRESSURE SWITCH VENT TUBE SHALL EXTEND TO THE TOP OF THE CONTROL PANEL
4. LAY THE "J" BOX COVER ON THE GROUND ABOUT 1' FROM THE TANK THEN CUT WIRES TO BE SPLICED
5. ALL CONNECTIONS FROM THE PUMP AND SWITCHES TO THE "J" BOX AND CONTROL PANEL SHALL COMPLY WITH HAMILTON COUNTY BUILDING INSPECTION, NEC, AND LOCAL CODES
6. INSTALLATION REQUIRES ELECTRICAL PERMIT AND TAP-ON PERMIT
7. FINAL INSPECTION TO BE PERFORMED BY WWTA (423-209-7842)
8. MUST RUN 4 CONDUCTOR CABLE FROM SERVICE PANEL TO DISCONNECT

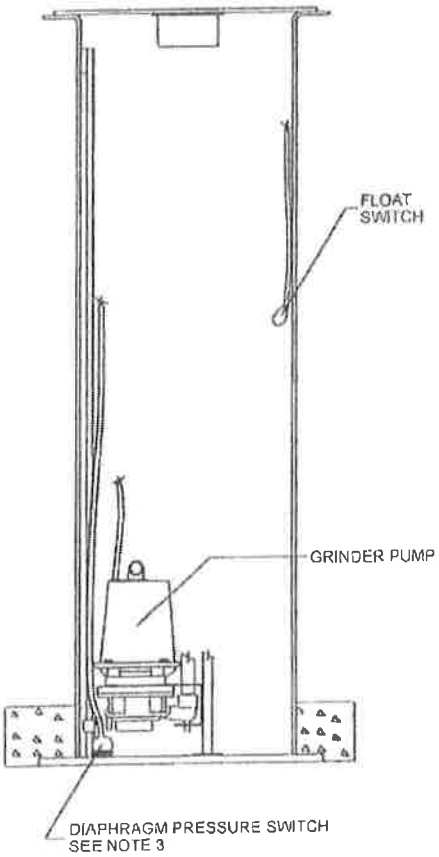

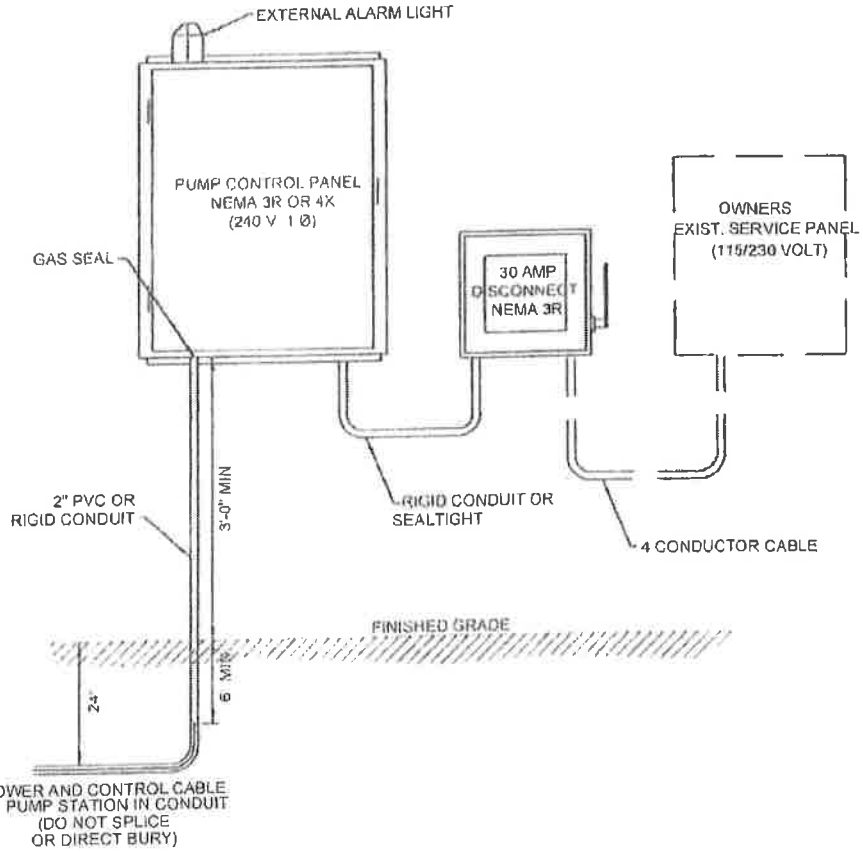

GRINDER PUMP ELECTRICAL INSTALLATION

HAMILTON COUNTY WATER & WASTEWATER TREATMENT AUTHORITY

SD-GP-3

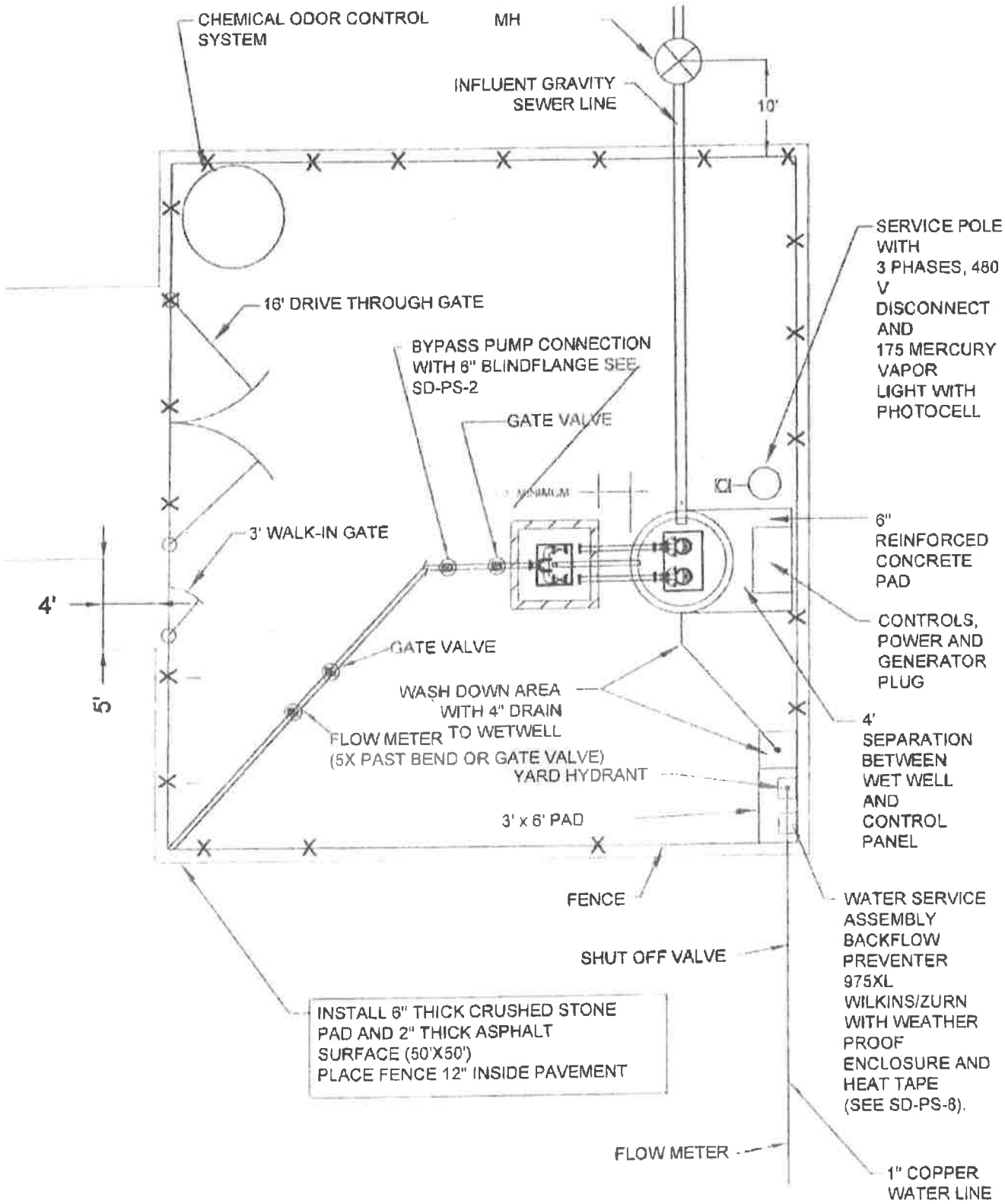

HAMILTON COUNTY WATER & WASTEWATER TREATMENT AUTHORITY
SD-PS-1

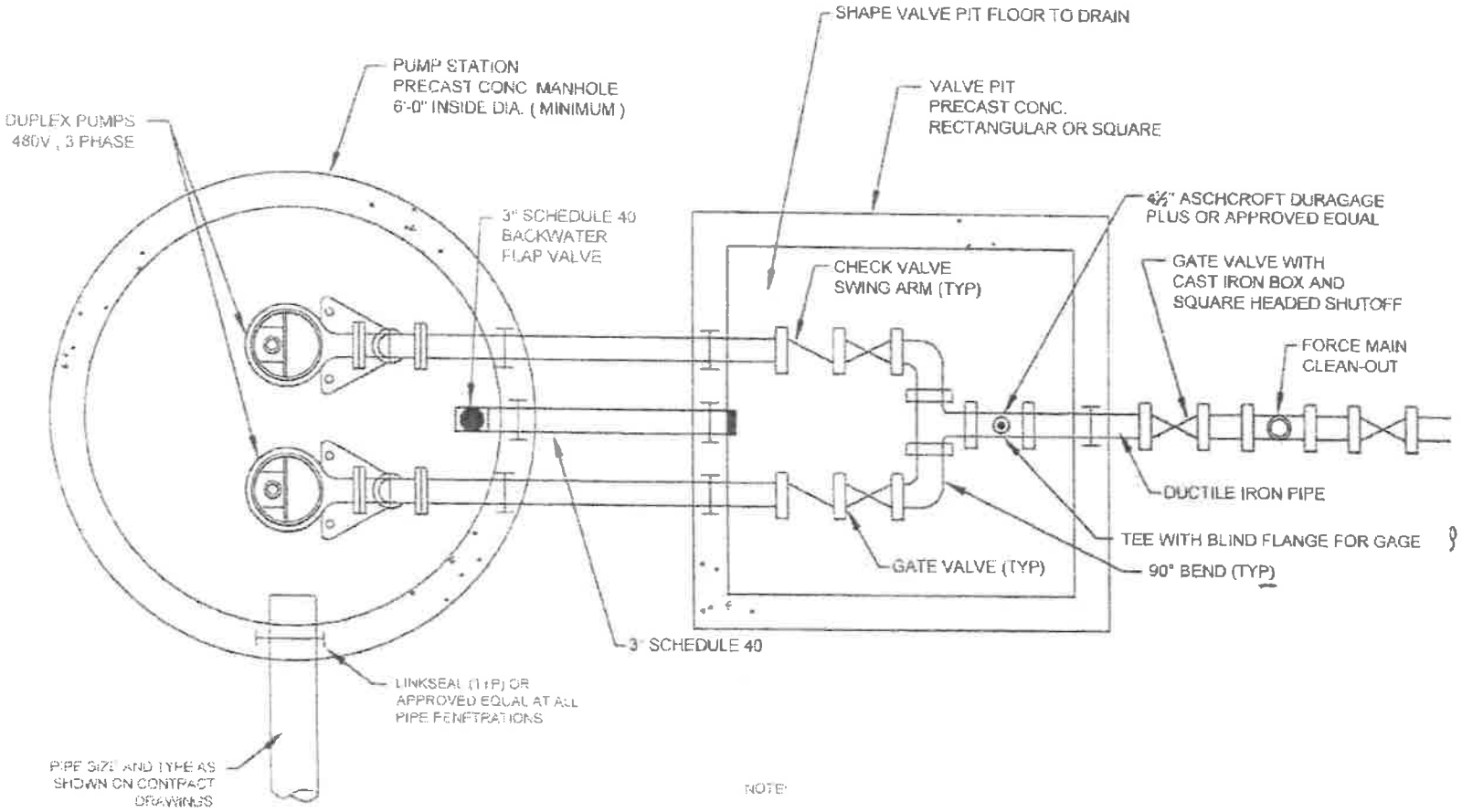

NOTE:

1. ALL PIPING TO TO BE DIP EXCEPT AS SHOWN
2. PIPE SIZES AS SHOWN ON CONTRACT DRAWINGS
3. FLANGED FITTINGS TO HAVE STAINLESS STEEL NUTS AND BOLTS

PUMP STATION PLAN VIEW

HAMILTON COUNTY WATER & WASTEWATER TREATMENT AUTHORITY

SD-PS-2

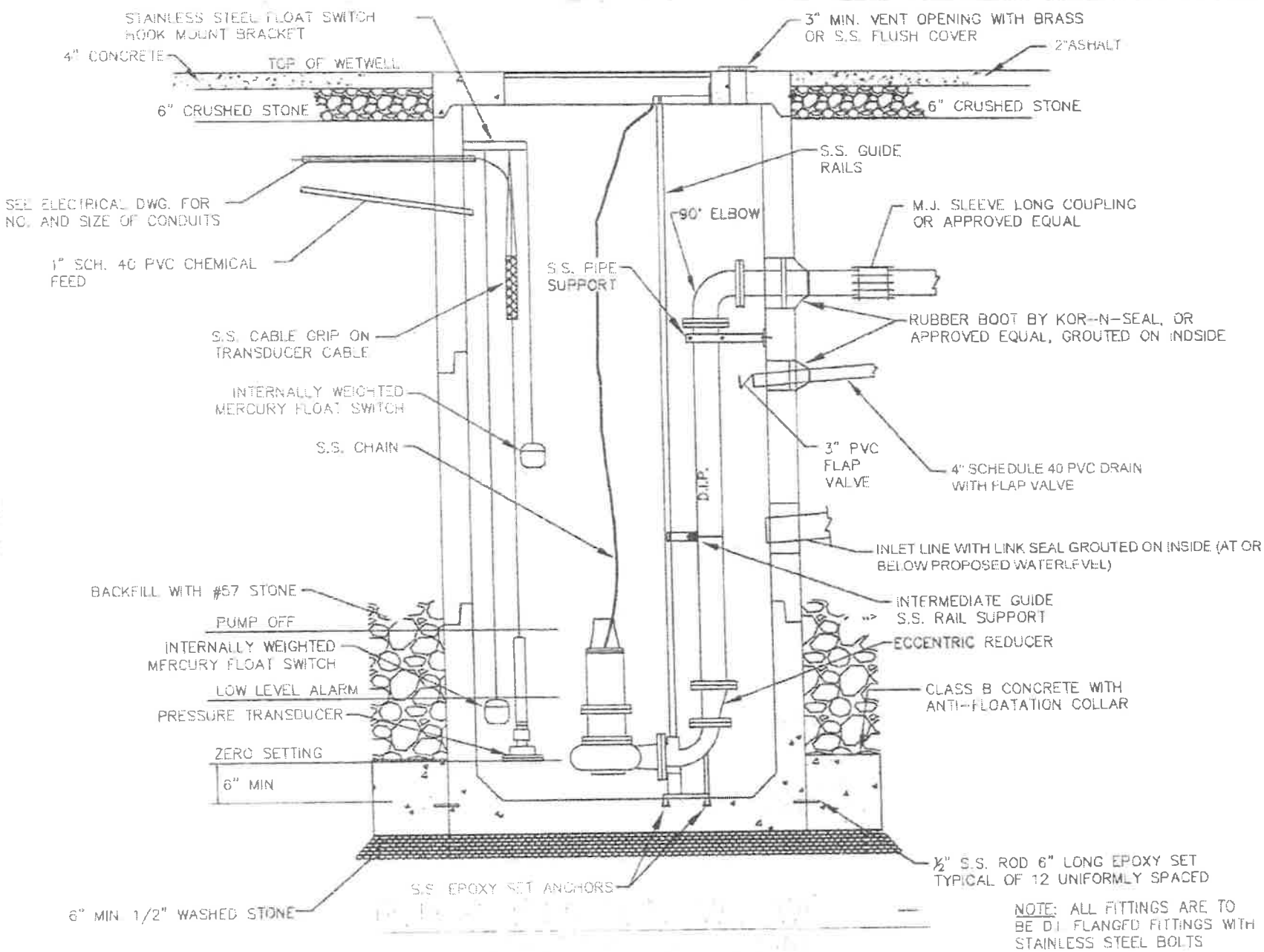

HAMILTON COUNTY WATER & WASTEWATER TREATMENT AUTHORITY

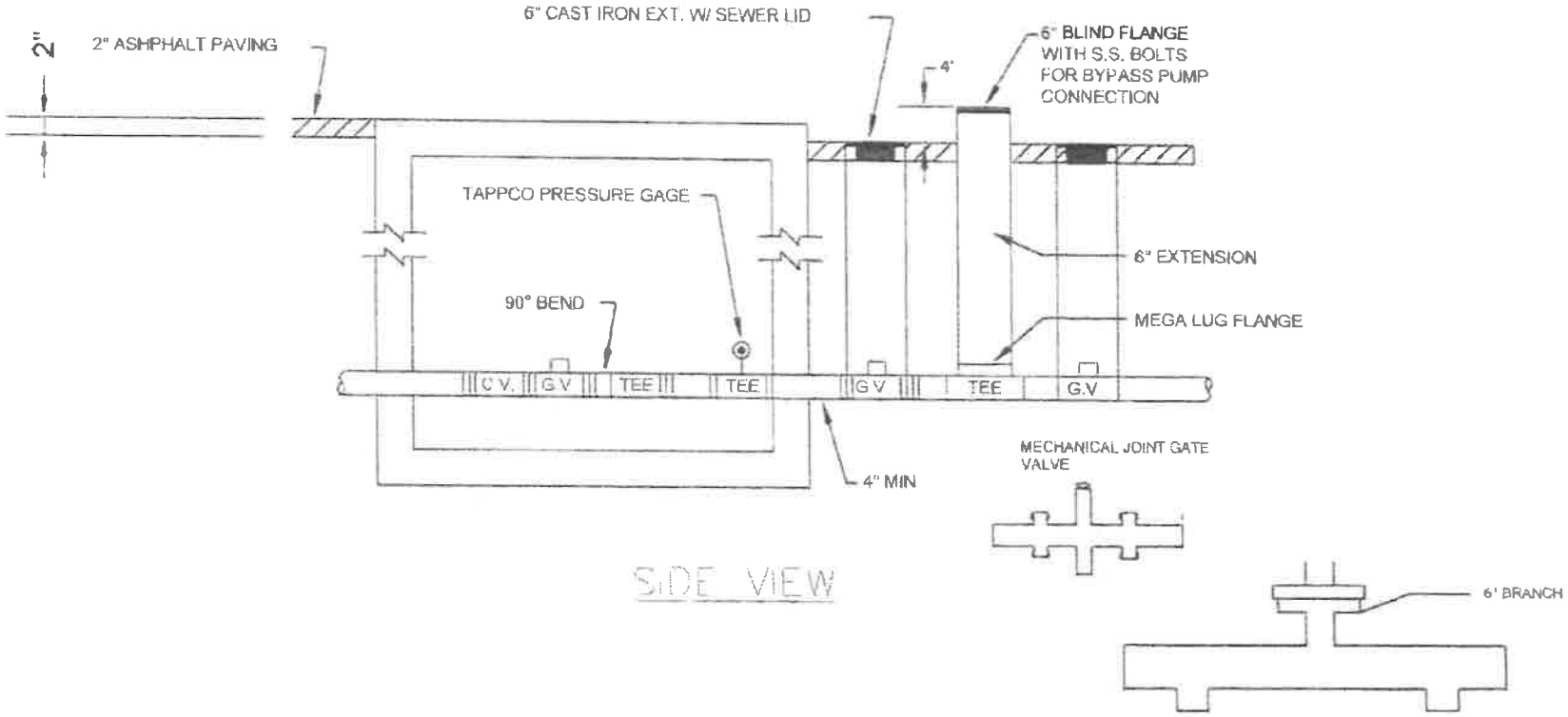

FORCE MAIN BYPASS DETAIL

HAMILTON COUNTY WATER & WASTEWATER TREATMENT AUTHORITY

SD-PS-4

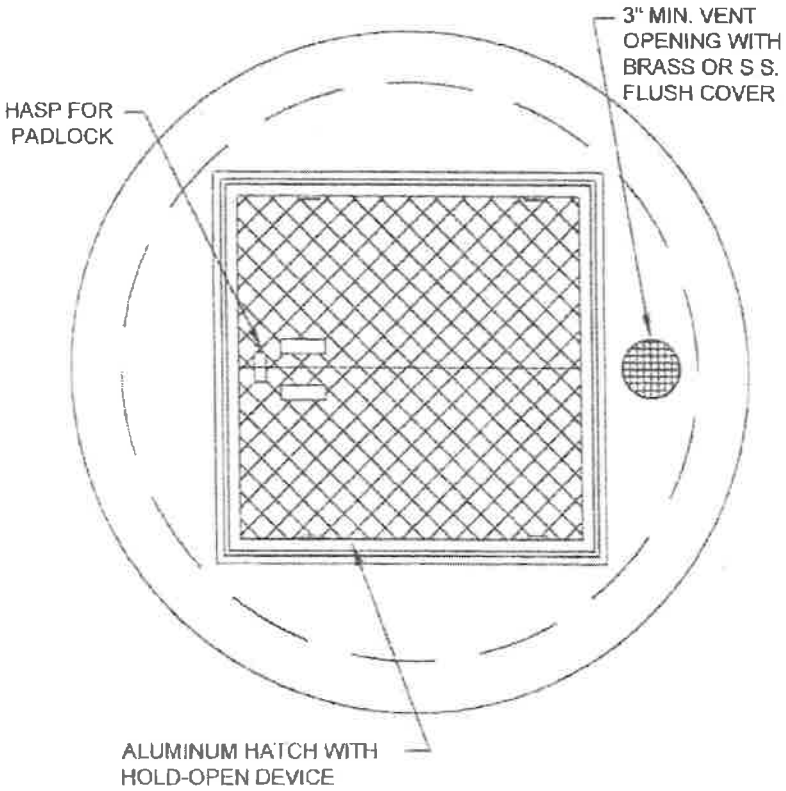

MINIMUM SIZING FOR PUMP HP:

SHAPE	PUMP HP	WETWELL SIZE	DOOR SIZE
ROUND	1 TO 25	6'	54" x 48"
ROUND	26 TO 65	8'	54" x 48"
ROUND	66 TO 96	10'	60" x 60"
RECT	97 TO.	OPEN	72" x 60"

PUMP STATION WETWELL HATCH

HAMILTON COUNTY WATER & WASTEWATER TREATMENT AUTHORITY

SD-PS-5

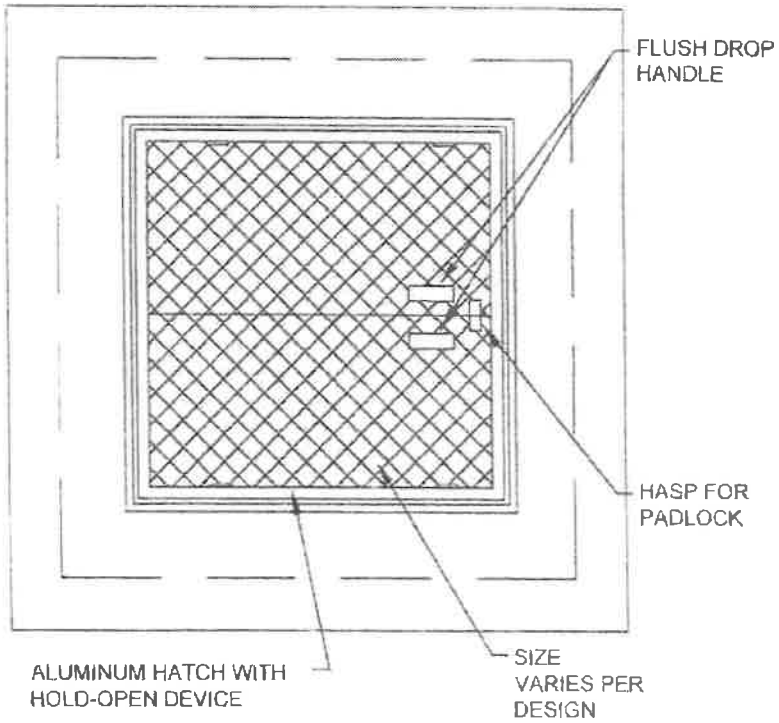

MINIMUM SIZING FOR PIPING:

PIPING SIZE	VAULT SIZE ID	DOOR SIZE
4"	62" x 62"	54" x 48"
6"	72" x 72"	54" x 48"
8"	84" x 84"	60" x 60"
10"	96" x 72"	72" x 60"

3 PUMP

PIPING SIZE	VAULT SIZE ID	DOOR SIZE
6"	108" x 108"	72" x 60"
8"	144" x 84"	120" x 60"
10"	144" x 84"	120" x 60"

VALVE BOX HATCH

HAMILTON COUNTY WATER & WASTEWATER TREATMENT AUTHORITY

SD-PS-5

[illegible] THROUGH GATE & 3' WALK IN [illegible] SEATS, GRAY IN COLOR.

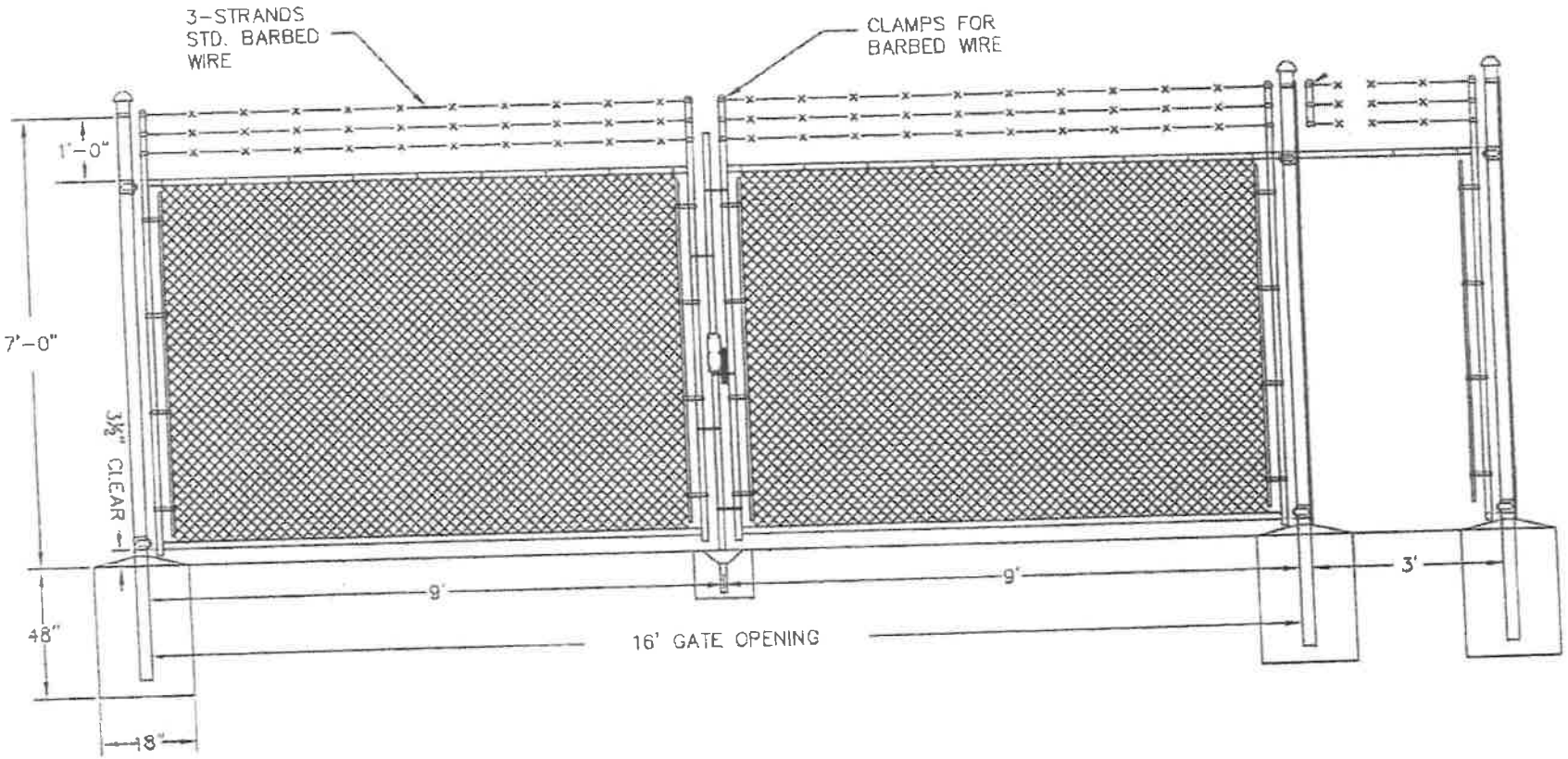

[illegible]

HAMILTON COUNTY WATER & WASTEWATER TREATMENT AUTHORITY

SD-PS-7

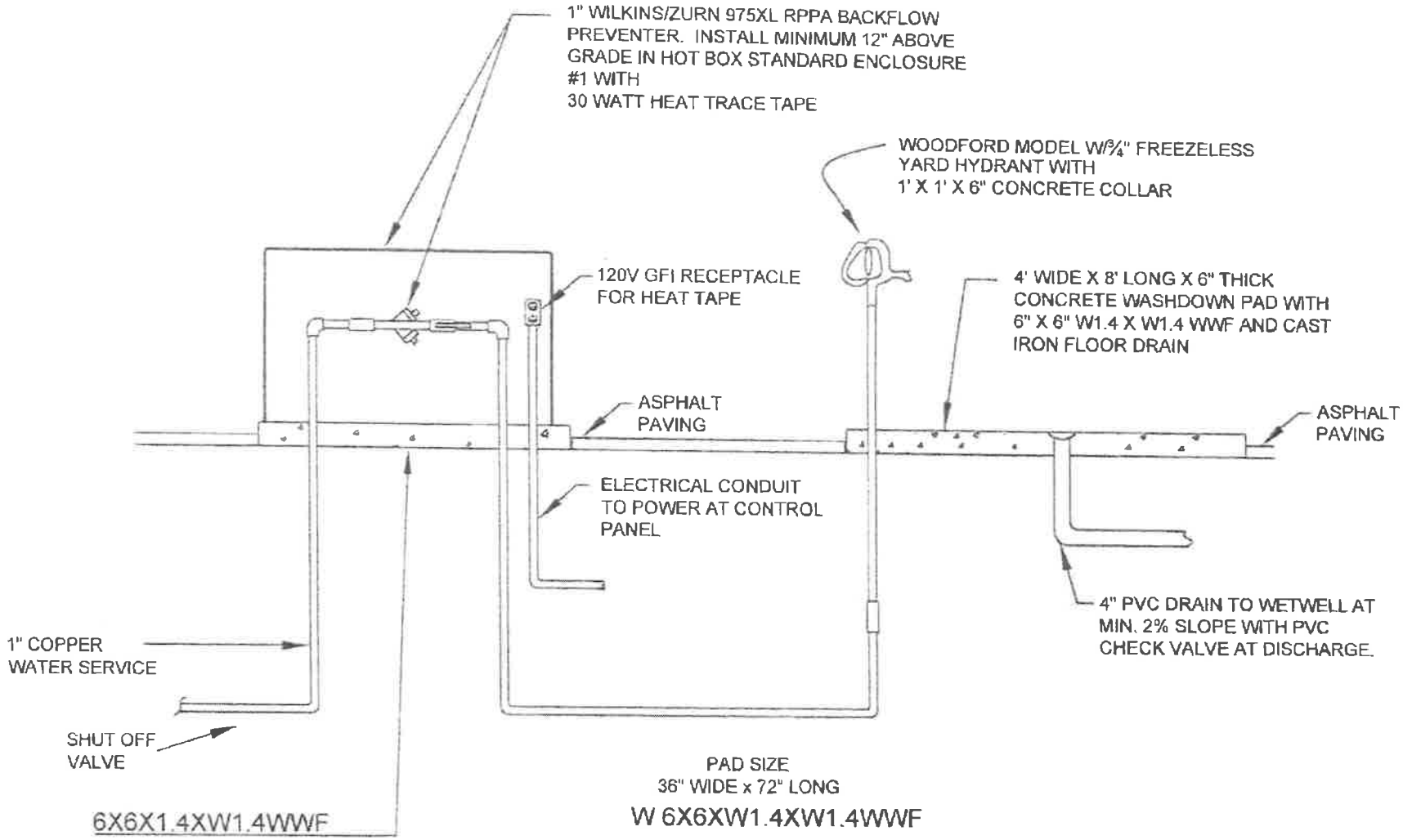

PUMP STATION WATER SERVICE ASSEMBLY DETAIL

HAMILTON COUNTY WATER & WASTEWATER TREATMENT AUTHORITY

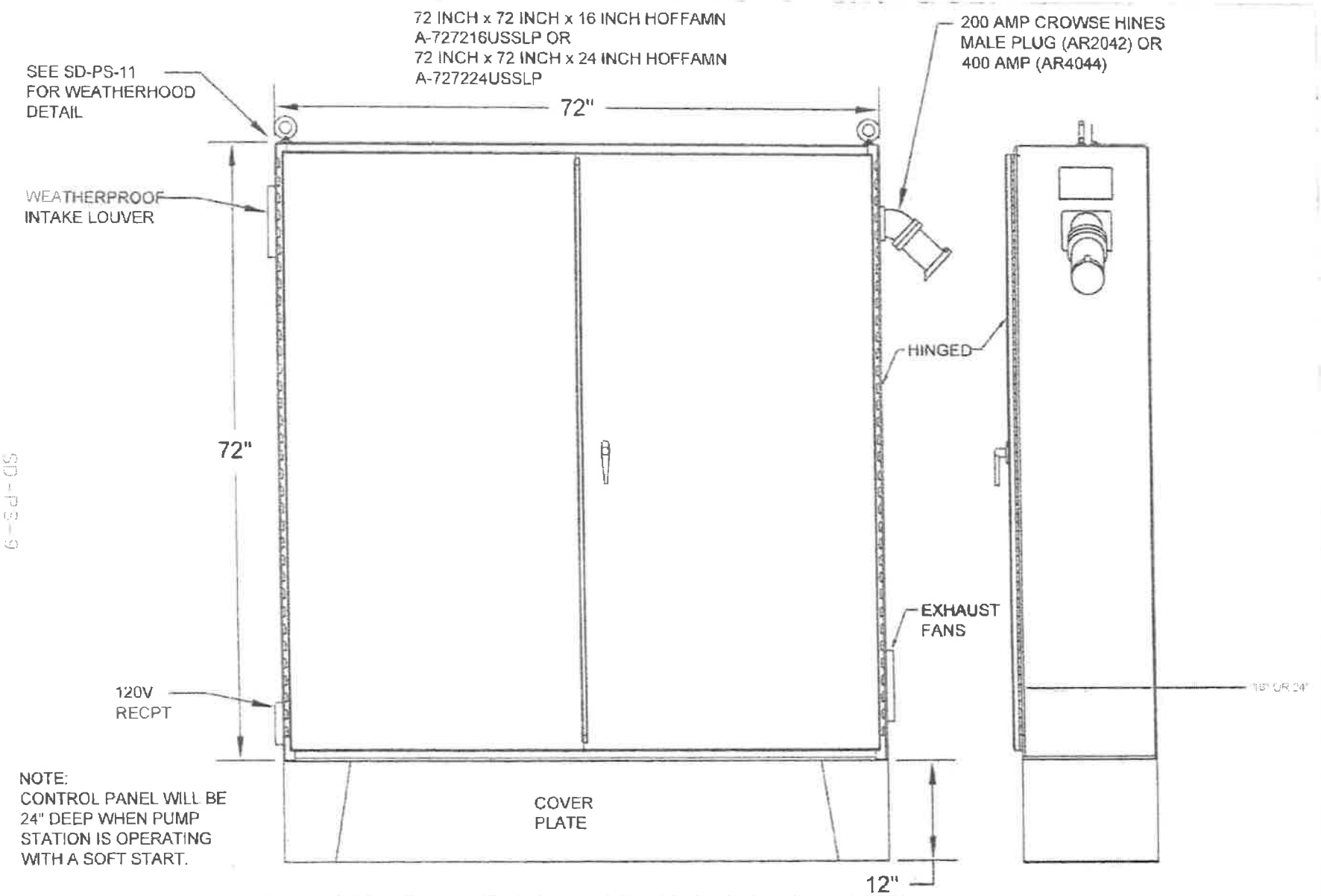

PUMP STATION CONTROL PANEL

HAMILTON COUNTY WATER & WASTEWATER TREATMENT AUTHORITY

SD-PS-9

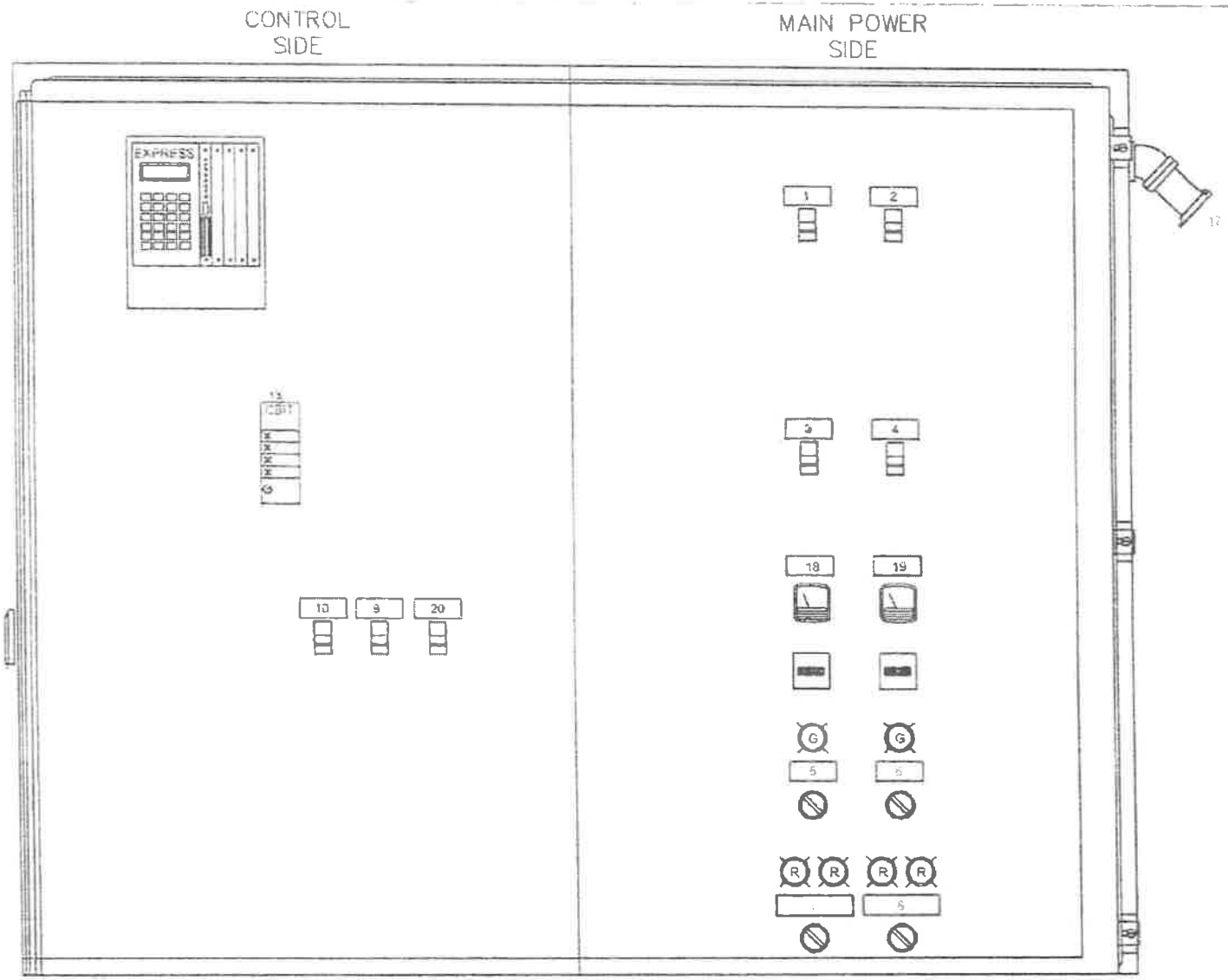

PUMP STATION CONTROL PANEL INNER DOOR LAYOUT

HAMILTON COUNTY WATER & WASTEWATER TREATMENT AUTHORITY

SD-PS-10

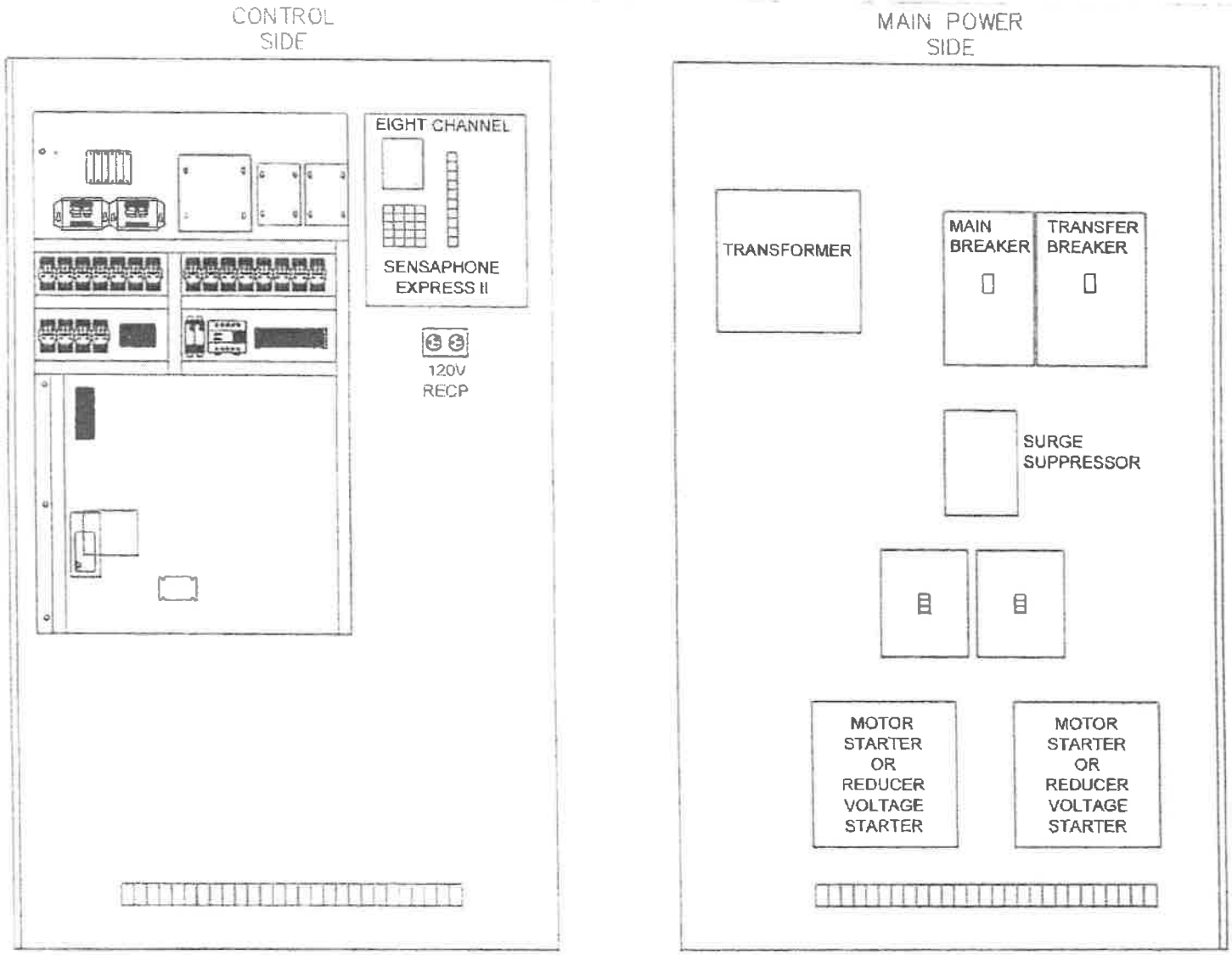

PUMP STATION CONTROL PANEL INTERNAL LAYOUT

HAMILTON COUNTY WATER & WASTEWATER TREATMENT AUTHORITY

SD-PS-11

NOTES:
1 ALL EXPOSED EDGES TO BE GROUND SMOOTH AND BURR FREE
2 WEATHER HOOD WILL BE FREE STANDING.

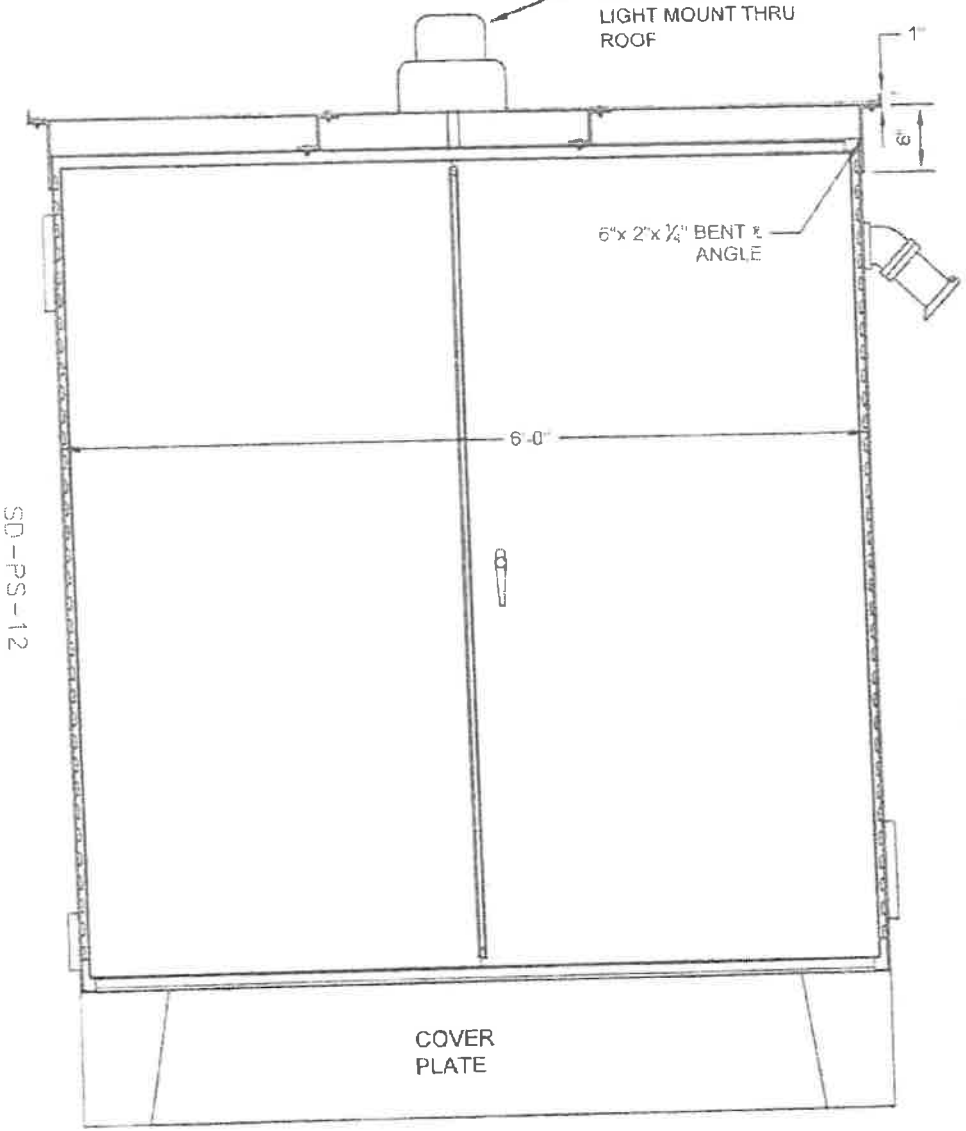

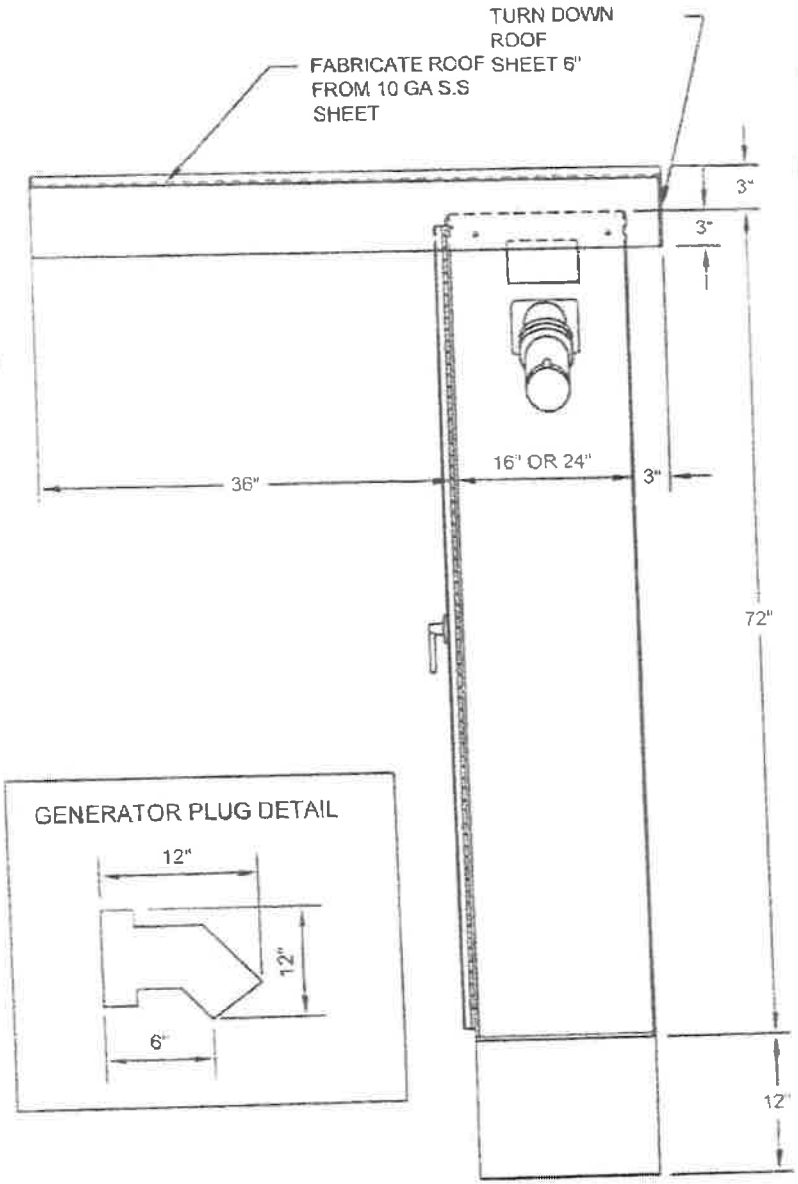

SD-PS-12

RAIN / SUN HOOD DETAIL

HAMILTON COUNTY WATER & WASTEWATER TREATMENT AUTHORITY

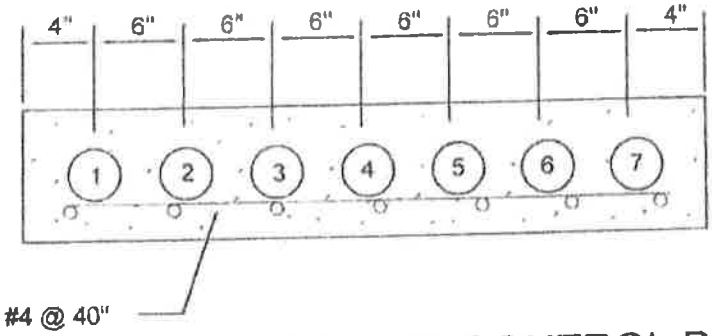

WETWELL OUT TO CONTROL PANEL

CONDUIT SCHEDULE

1. 2" C PUMP TO WETWELL
2. 2" C PUMP TO WETWELL
3. 2" C SPARE - PUMP TO WETWELL
4. 1" C PRESSURE TRANSDUCER TO WETWELL
5. 1" C FLOAT SWITCH TO WETWELL
6. 1" C FLOAT SWITCH TO WETWELL
7. 1" C - SPARE

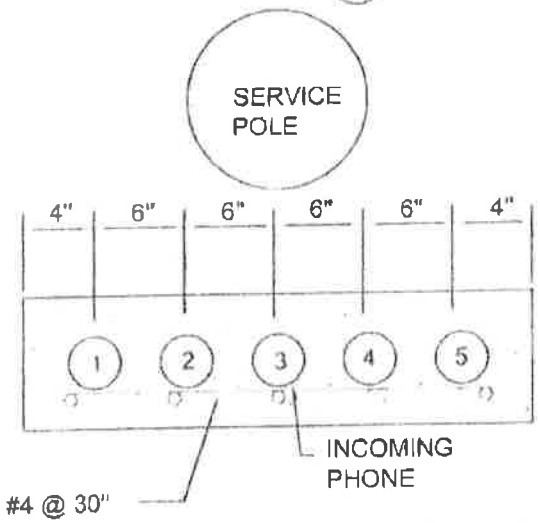

CONDUIT SCHEDULE

1. 3" C WITH 3-#4/0 & 1-#1/0 N TO SERVICE POLE
2. 3" C - SPARE
3. 1" C (UG. SVC-NO OVERHEAD LINES) - W/PULL WIRE TO SERVICE POLE (TELEPHONE)
4. 1" C - 3-#12 TO LIGHT ON POLE
5. 1" C - SPARE

SERVICE POLE OUT TO CONTROL PANEL

UNDERGROUND ELECTRICAL SCHEDULE A

HAMILTON COUNTY WATER & WASTEWATER TREATMENT AUTHORITY

SD-PS-13

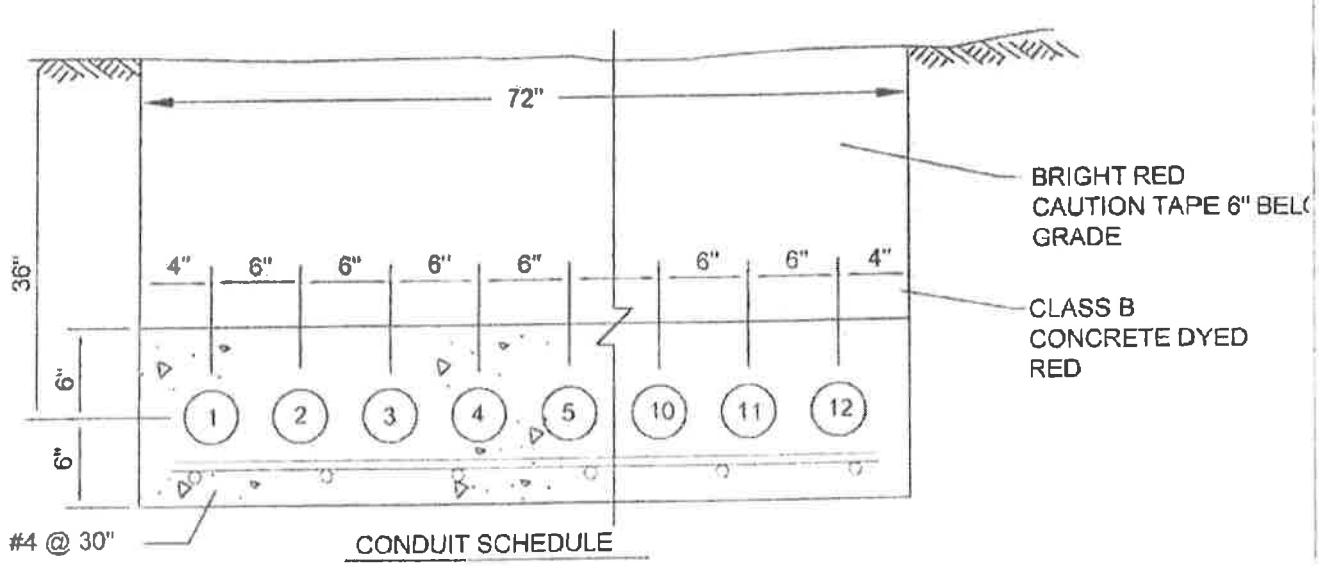

CONDUIT SCHEDULE

1. 2" C PUMP TO WETWELL
2. 2" C PUMP TO WETWELL
3. 2" C SPARE TO WETWELL
4. 1" C TRANSDUCER TO WETWELL
5. 1" C FLOAT SWITCHES TO WETWELL
6. 1" C SPARE
7. 2" C TO SERVICE DISCONNECT
8. 1" C TO LIGHT ON SERVICE POLE
9. 1" C TO SERVICE POLE (TELEPHONE)
10. 1" C TO LIMIT SWITCHES IN VALVE BOX
11. 1" C TO ODOR CONTROL PANEL (IF NEEDED)
12. 1" C SPARE TO SERVICE POLE

CONTROL PANEL OUT

UNDERGROUND ELECTRICAL CONDUIT DETAIL D

HAMILTON COUNTY WATER & WASTEWATER TREATMENT AUTHORITY

SD-PS-14

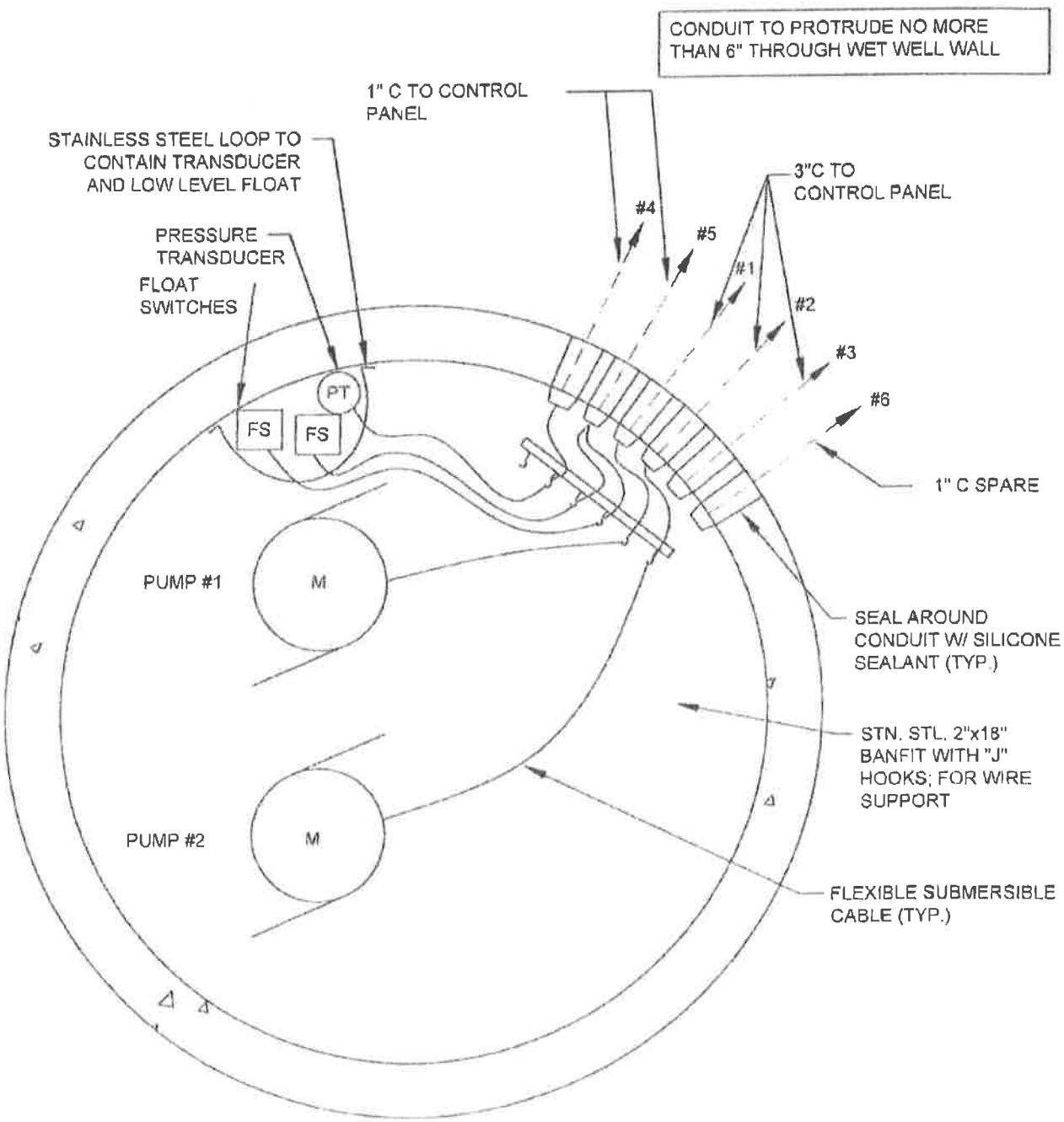

HAMILTON COUNTY WATER & WASTEWATER TREATMENT AUTHORITY

SD-PS-15

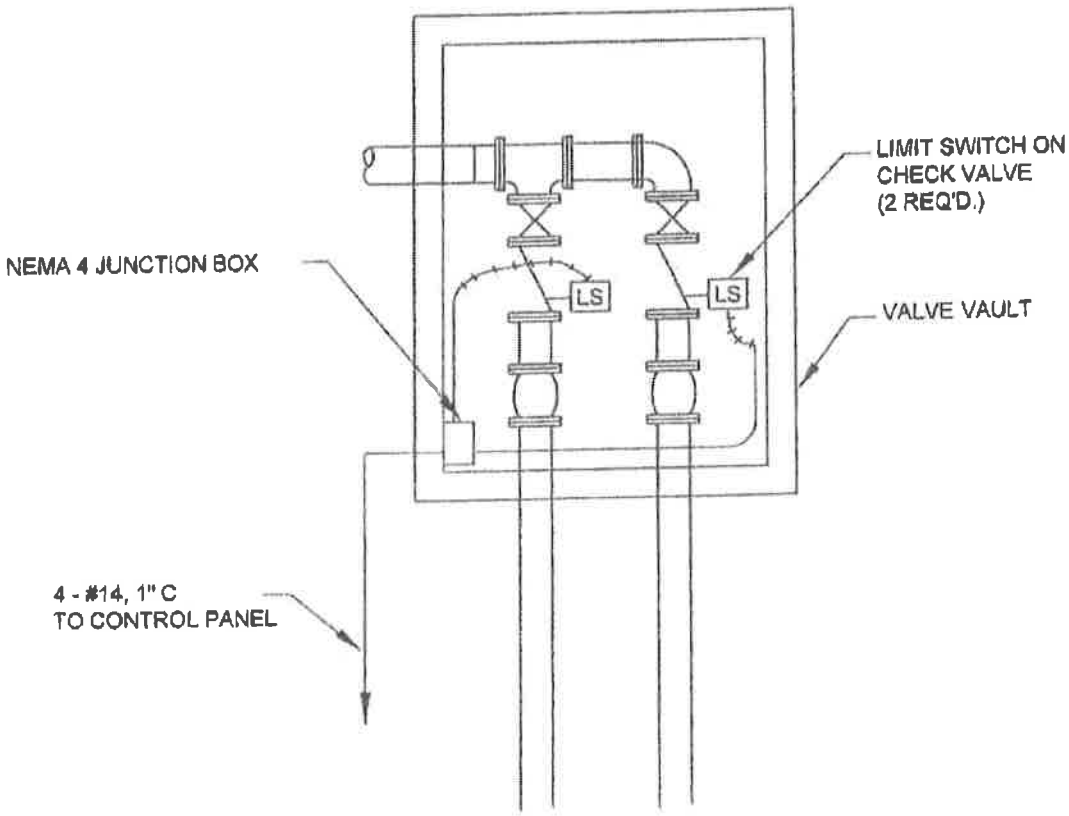

PUMP STATION VALVE BOX WIRING PLAN

HAMILTON COUNTY WATER & WASTEWATER TREATMENT AUTHORITY

SO-PS-16

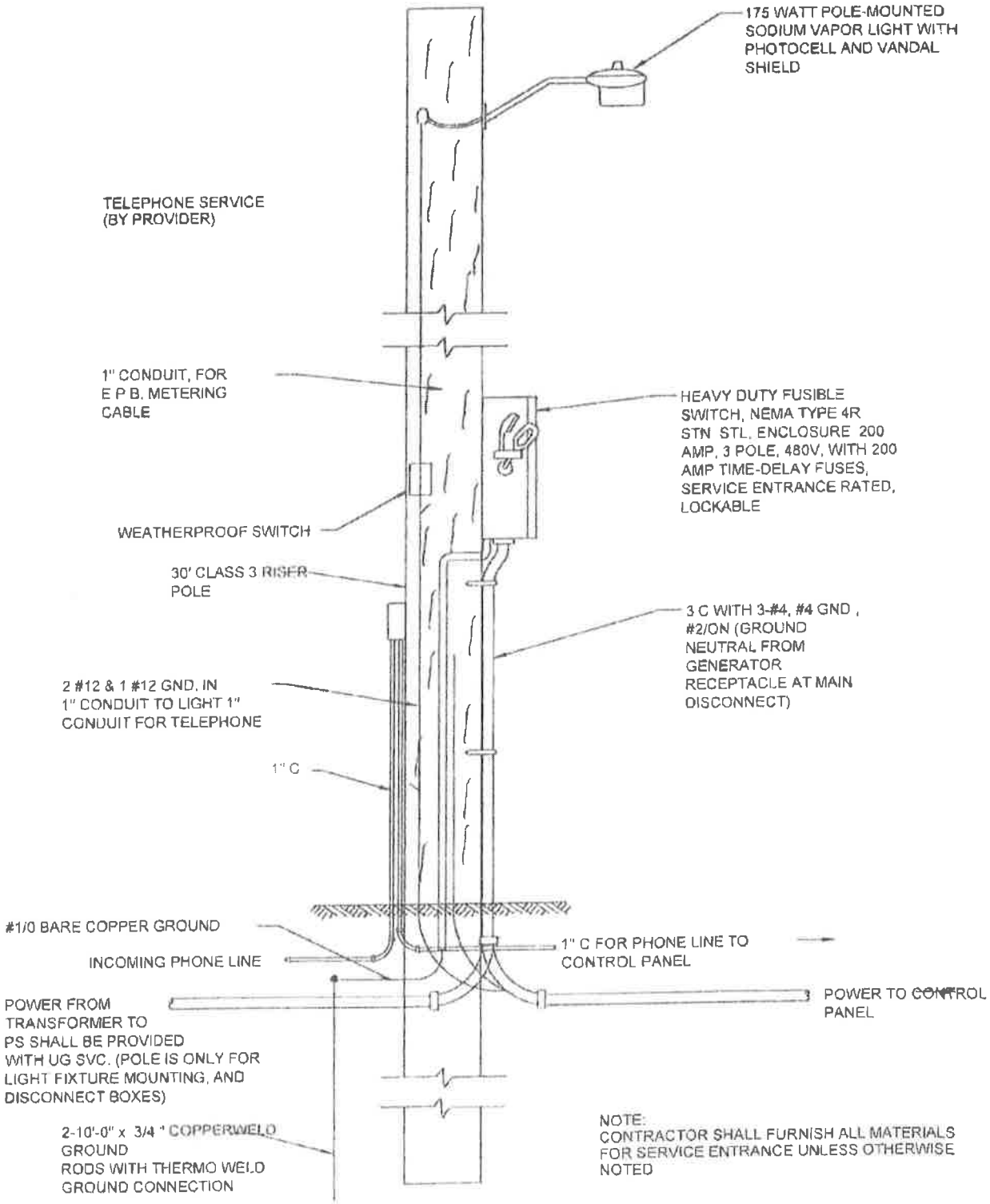

HAMILTON COUNTY WATER & WASTEWATER TREATMENT AUTHORITY

SD-PS-17

PUMP CONTROL UPGRADE
SOCCY DAISY

RICHARDSON ELECTRIC INC.
CHATTANOOGA, TN.

RC-07009

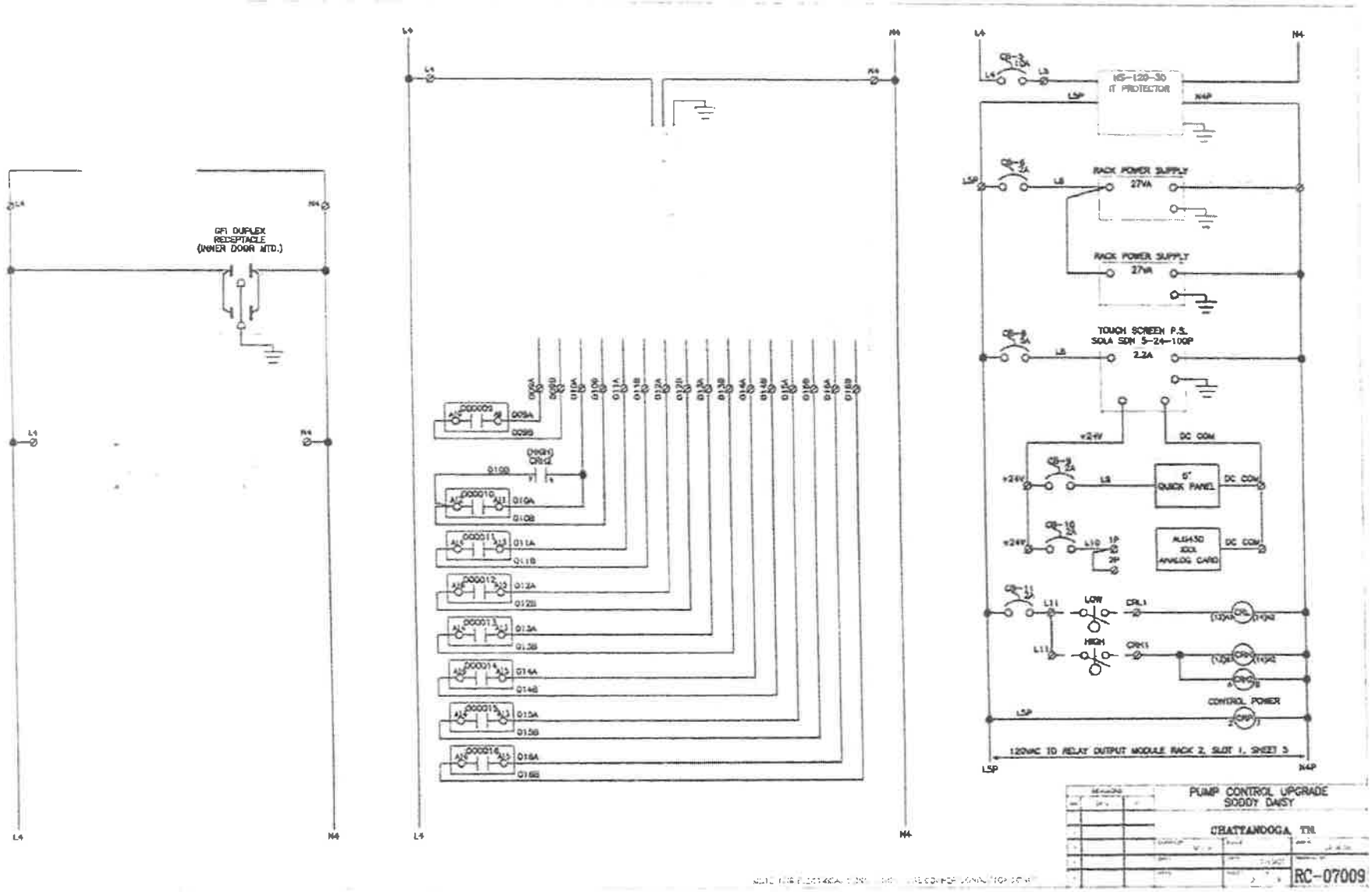
GFI DUPLEX RECEPTACLE (INNER DOOR MTD.)
L4
N4
HS-120-30 IT PROTECTOR
L5P
N4P
RACK POWER SUPPLY 27VA
RACK POWER SUPPLY 27VA
TOUCH SCREEN P.S. SOLA SDN 5-24-100P 2.2A
+24V
DC COM
6" QUICK PANEL
ALG430 XXX ANALOG CARD
LOW
HIGH
CONTROL POWER
120VAC TO RELAY OUTPUT MODULE RACK 2, SLOT 1, SHEET 3
PUMP CONTROL UPGRADE
SODDY DAISY
CHATTANOOGA, TN
RC-07009

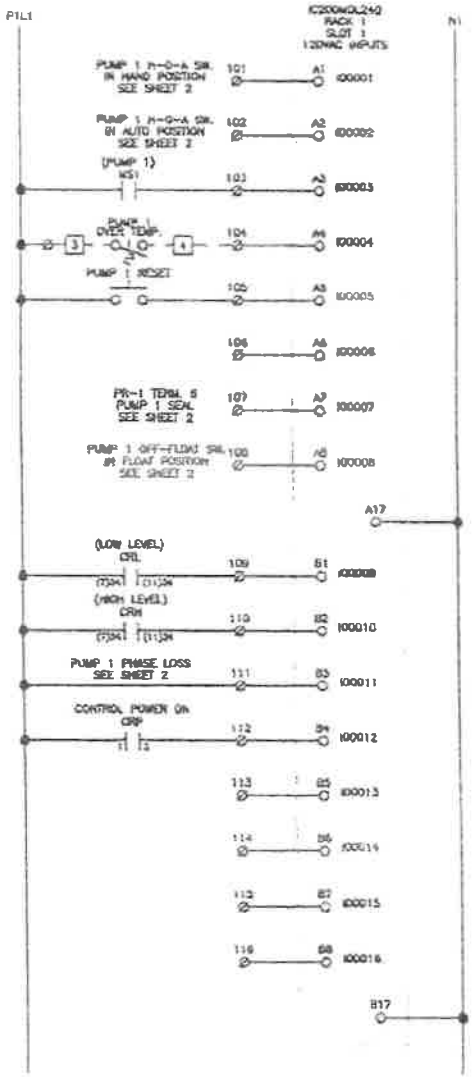

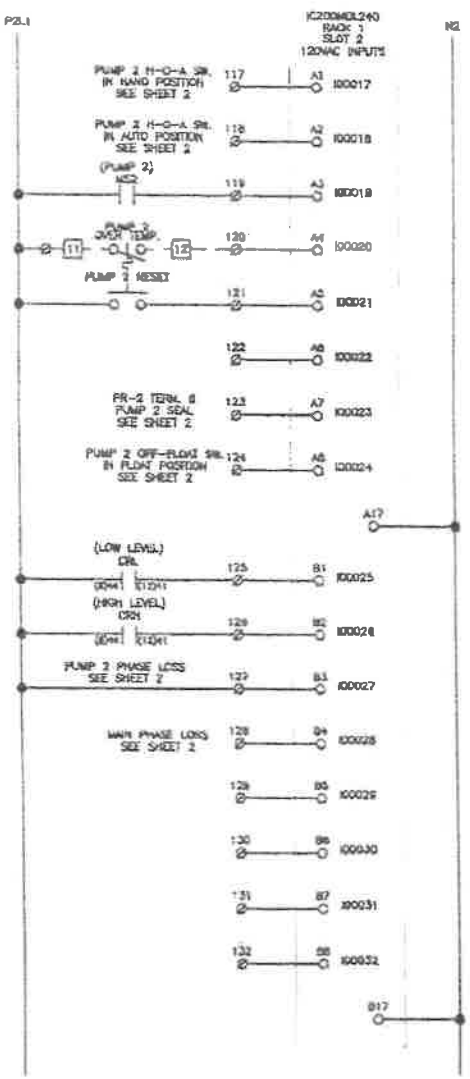

PUMP CONTROL UPGRADE
SODDY DAISY

RICHARDSON ELECTRIC INC.
CHATTANOOGA, TN.

RC-07009

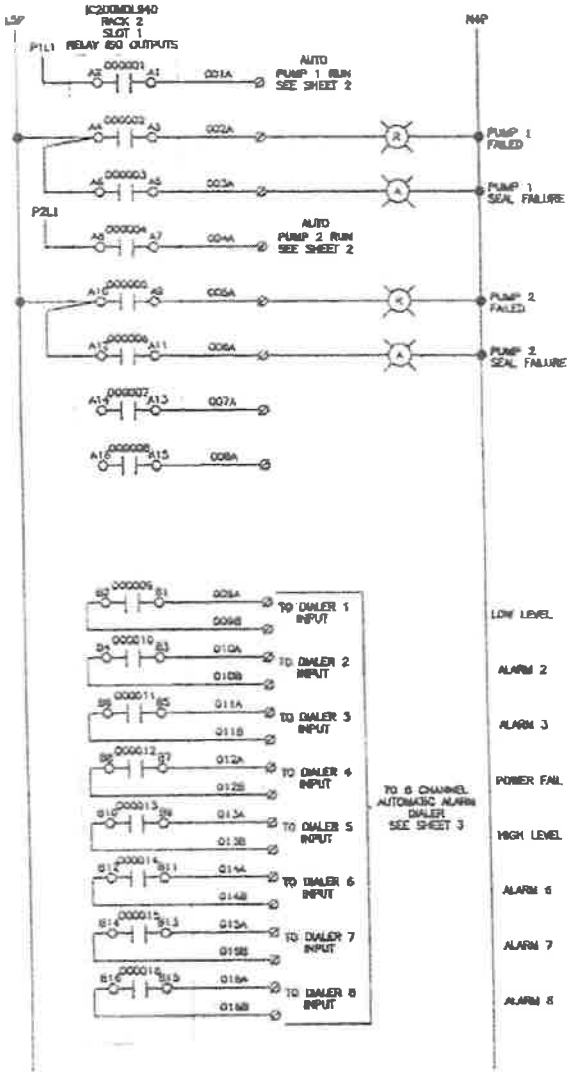

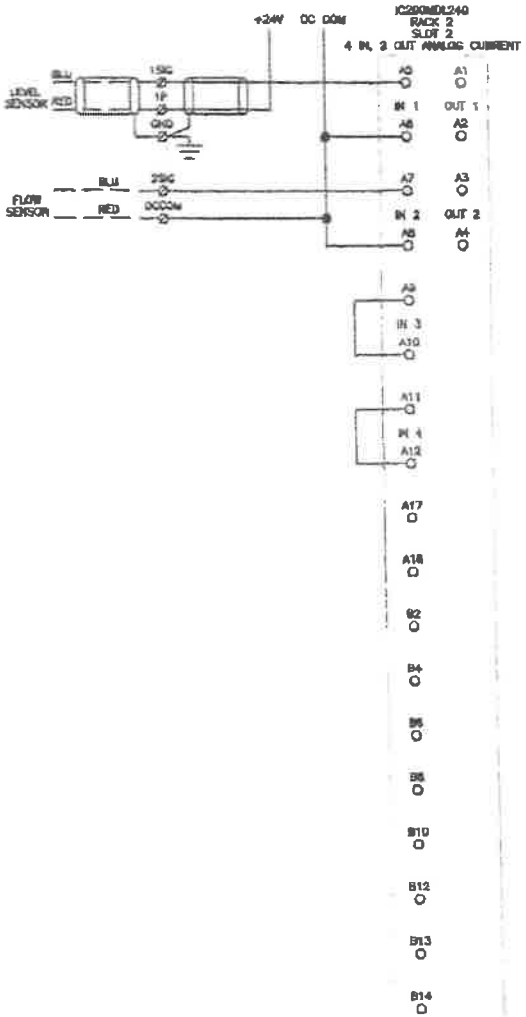

PUMP CONTROL UPGRADE
SODDY DAISY

RICHARDSON ELECTRIC INC.
CHATTANOOGA TN.

RC-07009

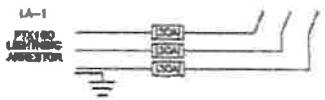

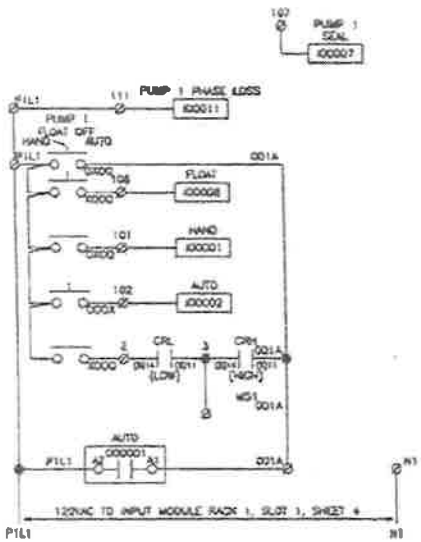

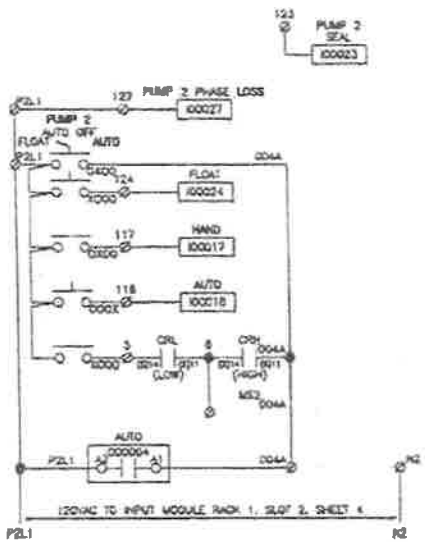

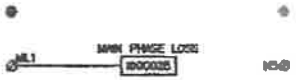

NOTE: FOR ELECTRICAL CONNECTIONS USE COPPER CONDUCTORS ONLY

PUMP CONTROL UPGRADE
SODDY DAISY
RICHARDSON ELECTRIC INC.
CHATTANOOGA, TN.

RC-07009

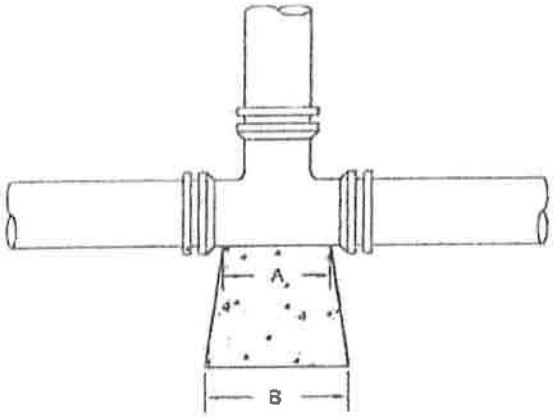

PLAN - TEE

- CONCRETE THRUST BLOCKS SHALL BE 3000 psi CLASS B CONCRETE POURED AGAINST UNDISTURBED EARTH.

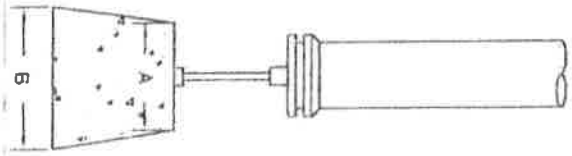

PLAN - DEAD END

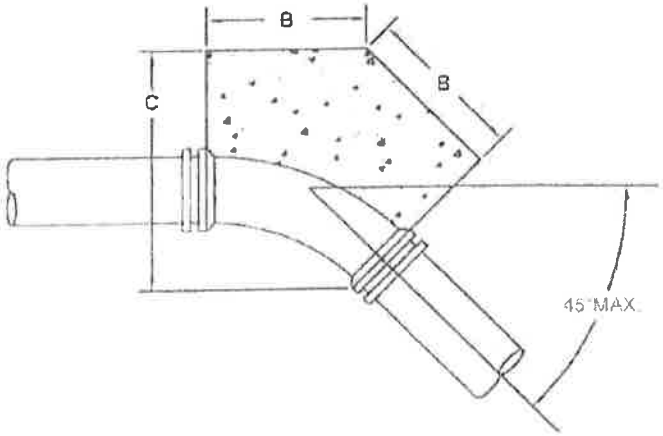

PLAN - TYPICAL VERTICAL BEND

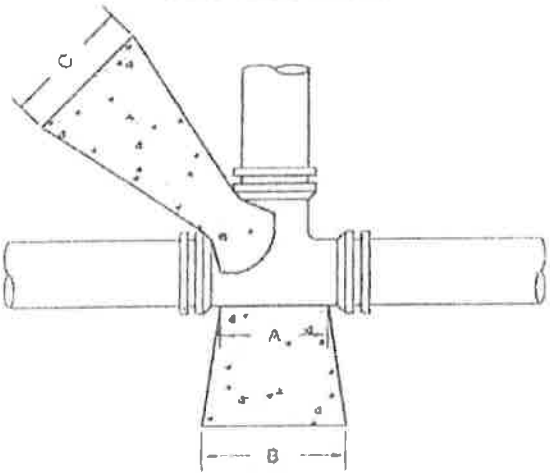

PLAN - UNBALANCED TEE

SIZE OF PIPE	TEE			DEAD END			90° BEND & UNBAL. TEE			45° BEND			22 1/2° BEND			11 1/4° BEND		
	A	B	C	A	B	C	A	B	C	A	B	C	A	B	C	A	B	C
1-1/2" to 4"	12"	24"	12"	4"	10"	11"	9"	12"	12"	9"	12"	12"	9"	7"	12"	6"	12"	4"
6"	12"	30"	18"	5"	15"	17"	12"	15"	24"	9"	12"	18"	9"	10"	12"	9"	12"	6"
8"	18"	36"	24"	7"	20"	21"	12"	24"	24"	9"	18"	20"	9"	12"	16"	9"	12"	8"
10"	21"	48"	27"	9"	24"	28"	16"	26"	36"	9"	24"	21"	9"	15"	18"	9"	12"	12"
12"	48"	56"	18"	11"	30"	31"	18"	36"	36"	12"	30"	24"	12"	18"	21"	12"	14"	15"
16"	54"	66"	18"	12"	36"	36"	21"	42"	42"	12"	51"	24"	12"	28"	24"	12"	16"	16"

NOTE:

TABLE DIMENSIONS ARE BASED ON SOIL RESISTANCE FOR UNDISTURBED SAND-GRAVEL CEMENTED WITH CLAY. FOR OTHER SOIL CONDITIONS, THE DIMENSIONS SHALL BE INCREASED BY THE FOLLOWING FACTORS:

SAND	2
SAND & GRAVEL	1.33
SHALE	0.4

SOFT CLAY, PEAT, AND MUCK SHALL USE RESTRAINED JOINTS

HAMILTON COUNTY WATER & WASTEWATER TREATMENT AUTHORITY

SD-FM-1

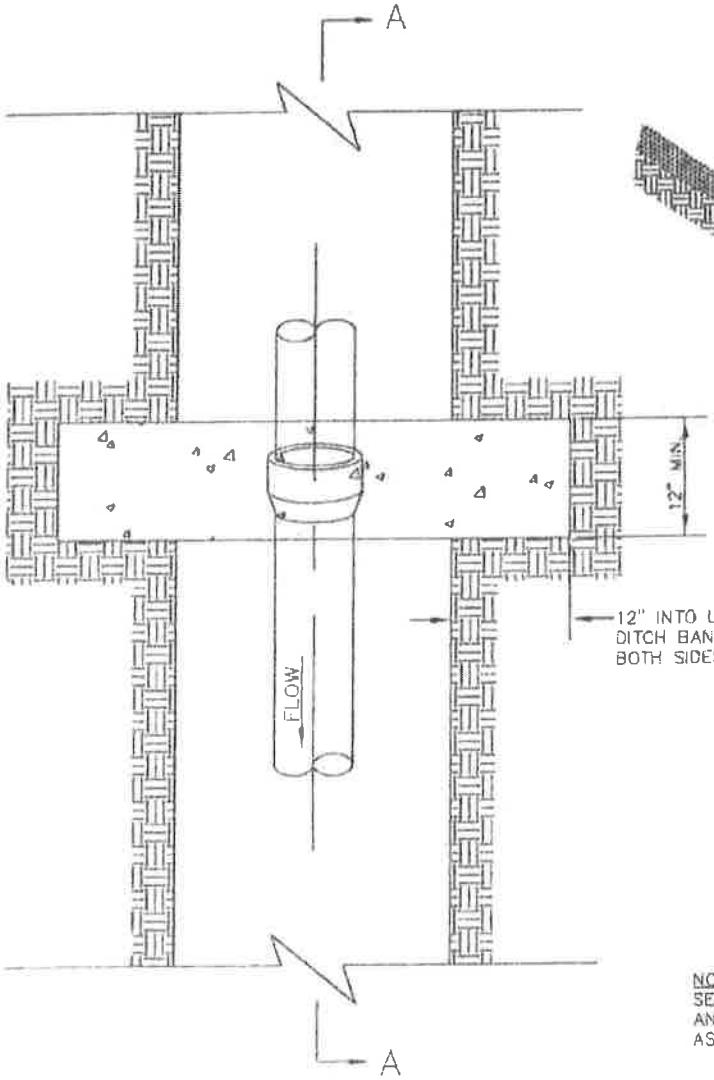

PLAN

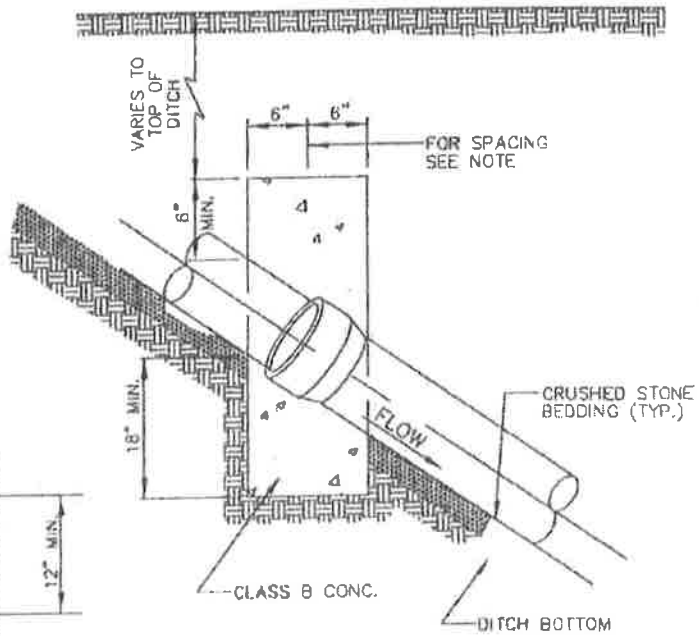

SECTION A–A

NOTE:
SEWERS ON 18% SLOPE OR GREATER SHALL BE ANCHORED SECURELY WITH CONCRETE ANCHORS AS FOLLOWS;

A. NOT OVER 40' DI / 104' PVC CENTER TO CENTER ON GRADES 18% TO 25%.

B. NOT OVER 30' DI / 78' PVC CENTER TO CENTER ON GRADES 25% TO 35%.

C. NOT OVER 20' DI / 52' PVC CENTER TO CENTER ON GRADES 35% & OVER.

FORCE MAIN GRAVITY CONCRETE ANCHOR BLOCK DETAIL FOR PIPES ON STEEP SLOPES

HAMILTON COUNTY WATER & WASTEWATER TREATMENT AUTHORITY

SD–FM–2

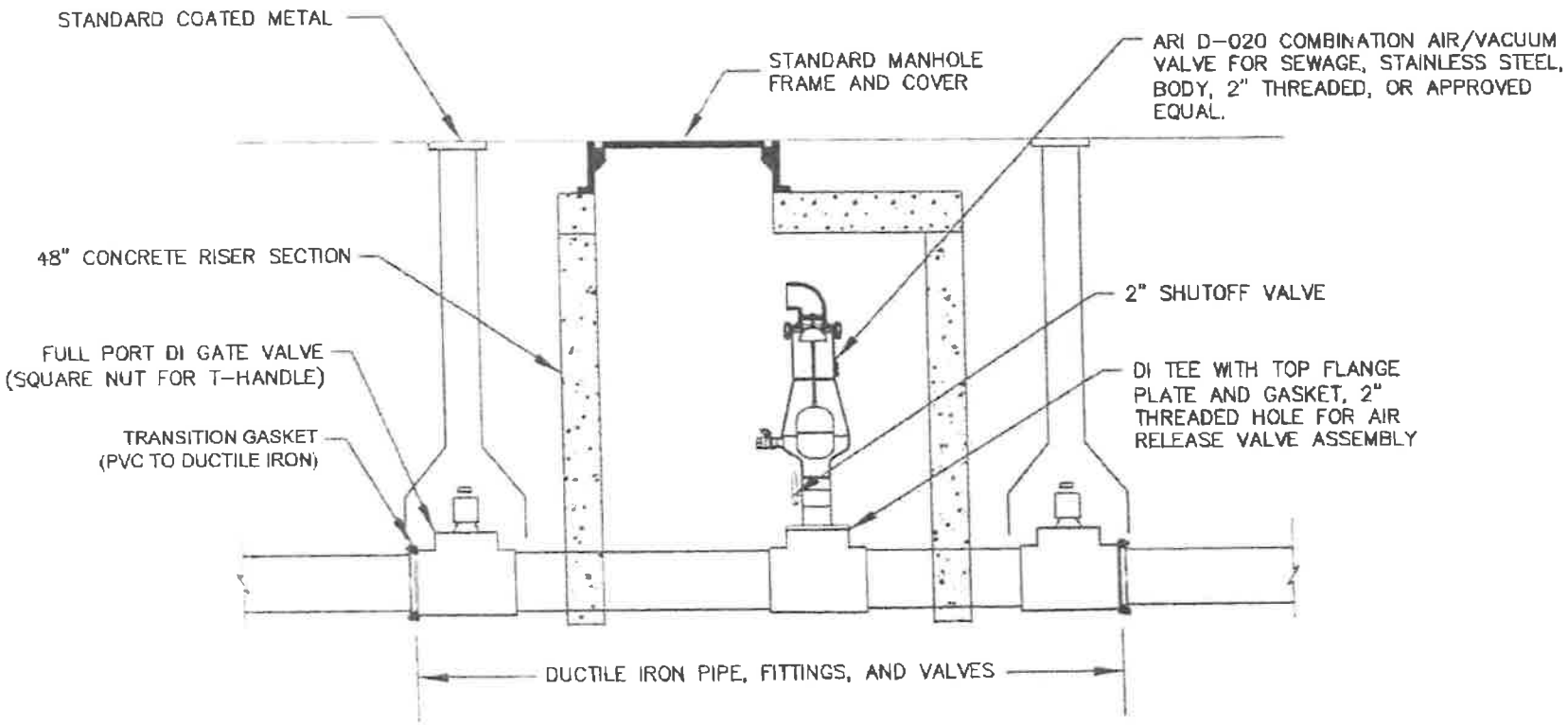

• SEE PLANS FOR SIZE OF FORCE MAIN AND LOCATION OF GATE VALVES NEAR AIR RELEASE VALVE

COMBINATION AIR RELEASE VALVE/CLEANOUT

HAMILTON COUNTY WATER & WASTEWATER TREATMENT AUTHORITY

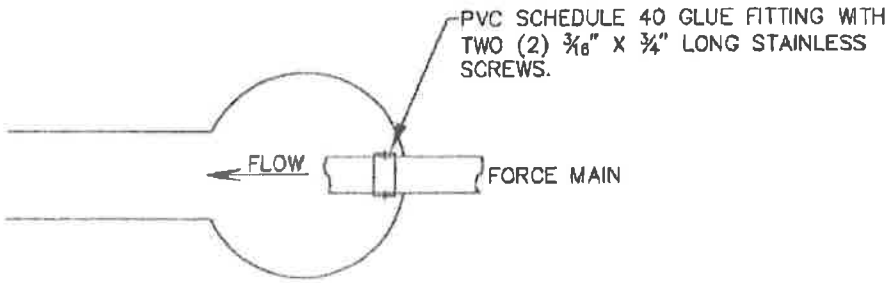

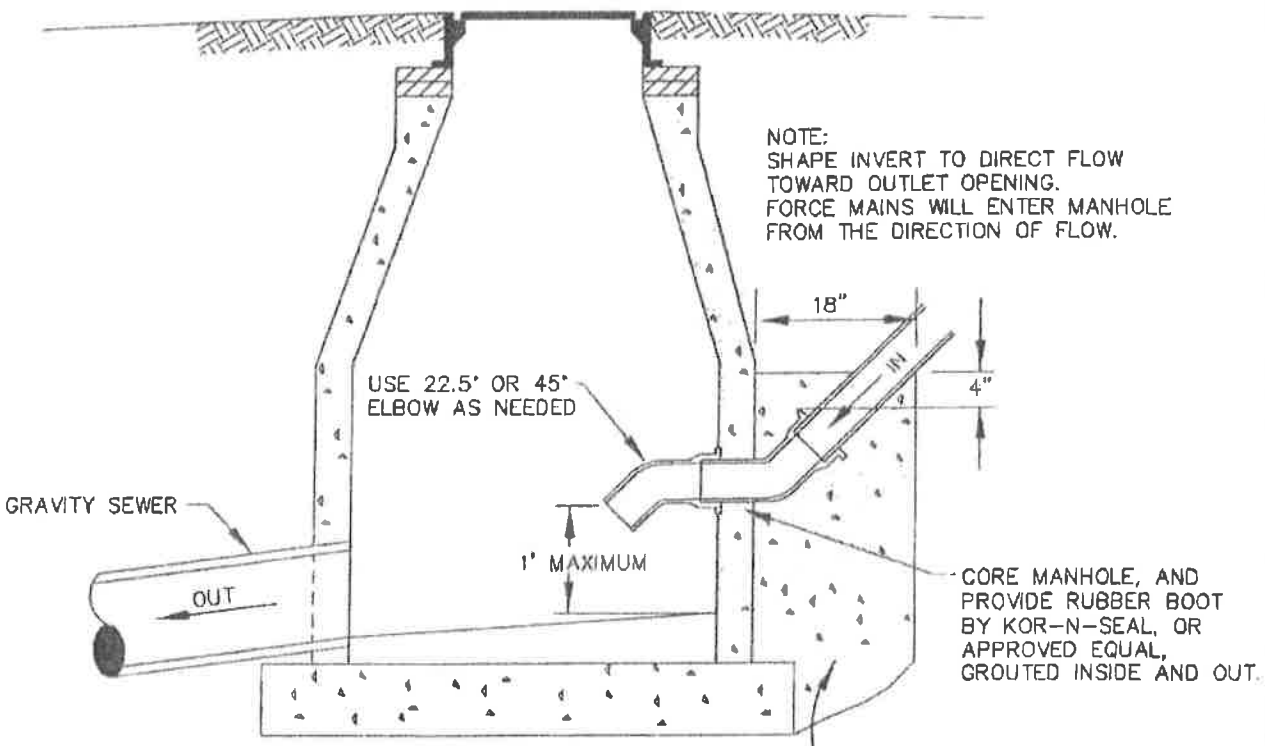

NOTE:
LOW PRESSURE MAINS ARE CONNECTED TO GRAVITY MAINS THROUGH THE USE OF A TEE.

STANDARD CONNECTION OF FORCE MAIN TO MANHOLE

HAMILTON COUNTY WATER & WASTEWATER TREATMENT AUTHORITY

SD-FM-4

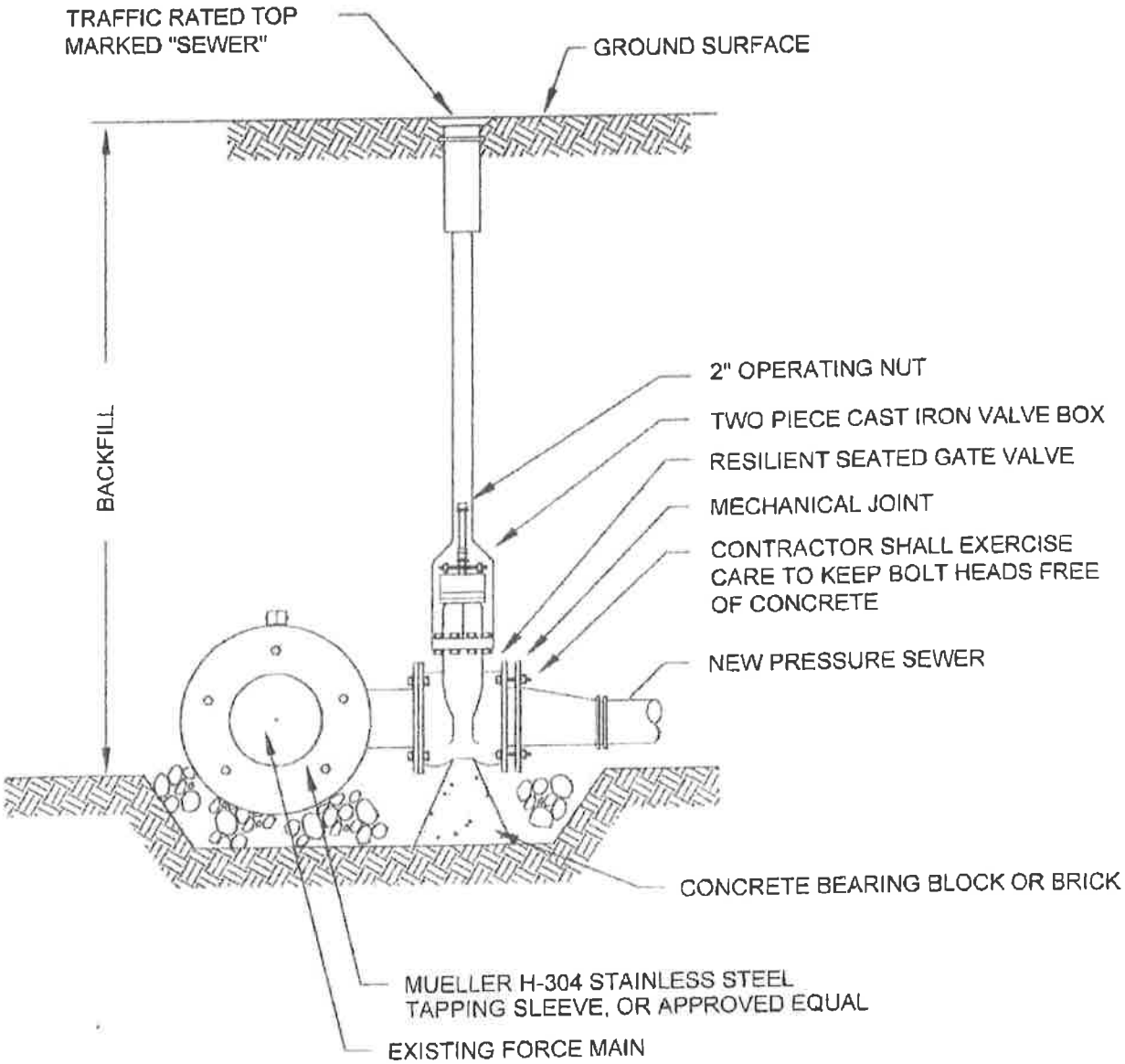

TAPPING VALVE INSTALLATION DETAIL

HAMILTON COUNTY WATER & WASTEWATER TREATMENT AUTHORITY

SD-FM-5

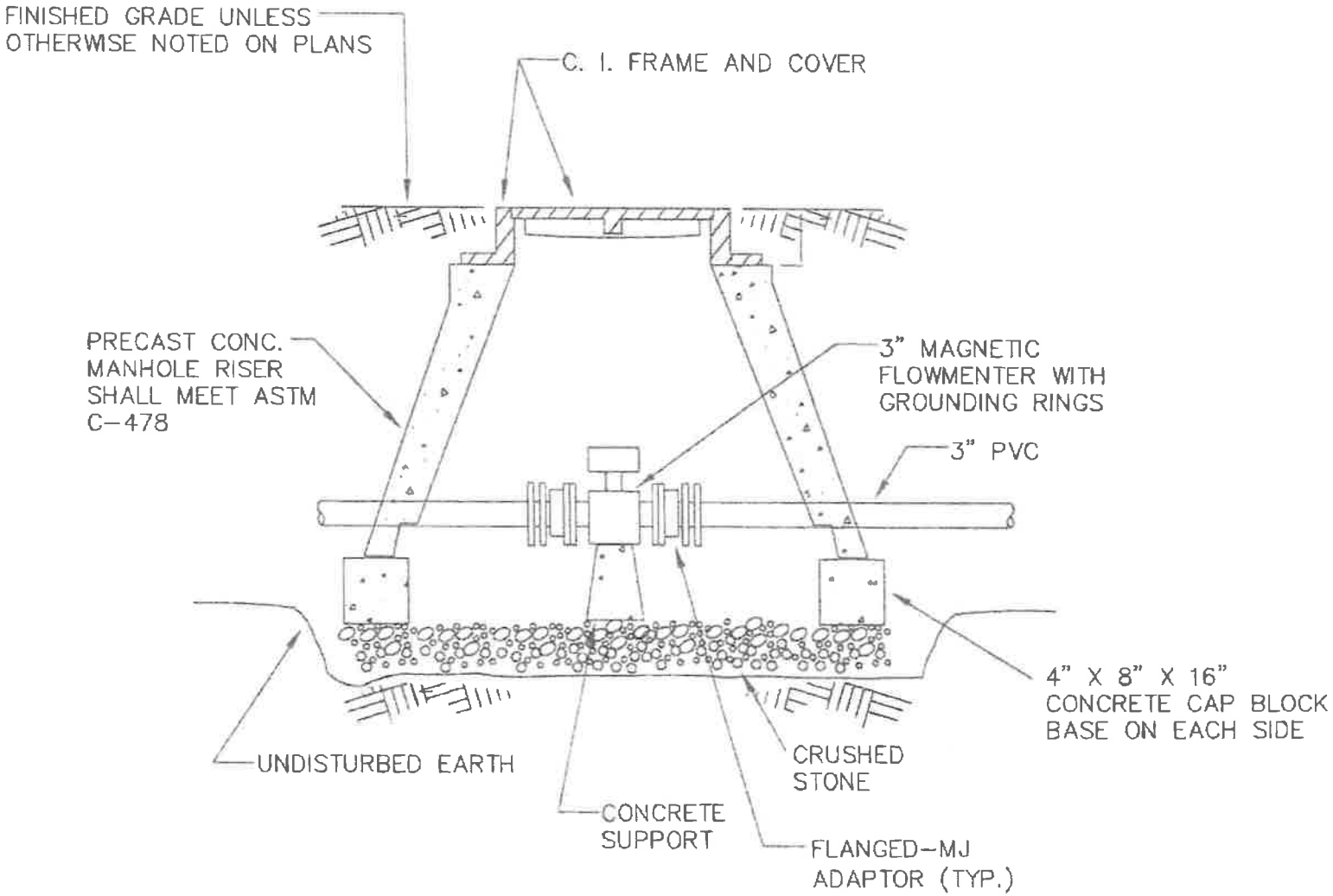

FLOWMETER DETAIL

NOT TO SCALE

HAMILTON COUNTY WATER & WASTEWATER TREATMENT AUTHORITY

SD-FM-6

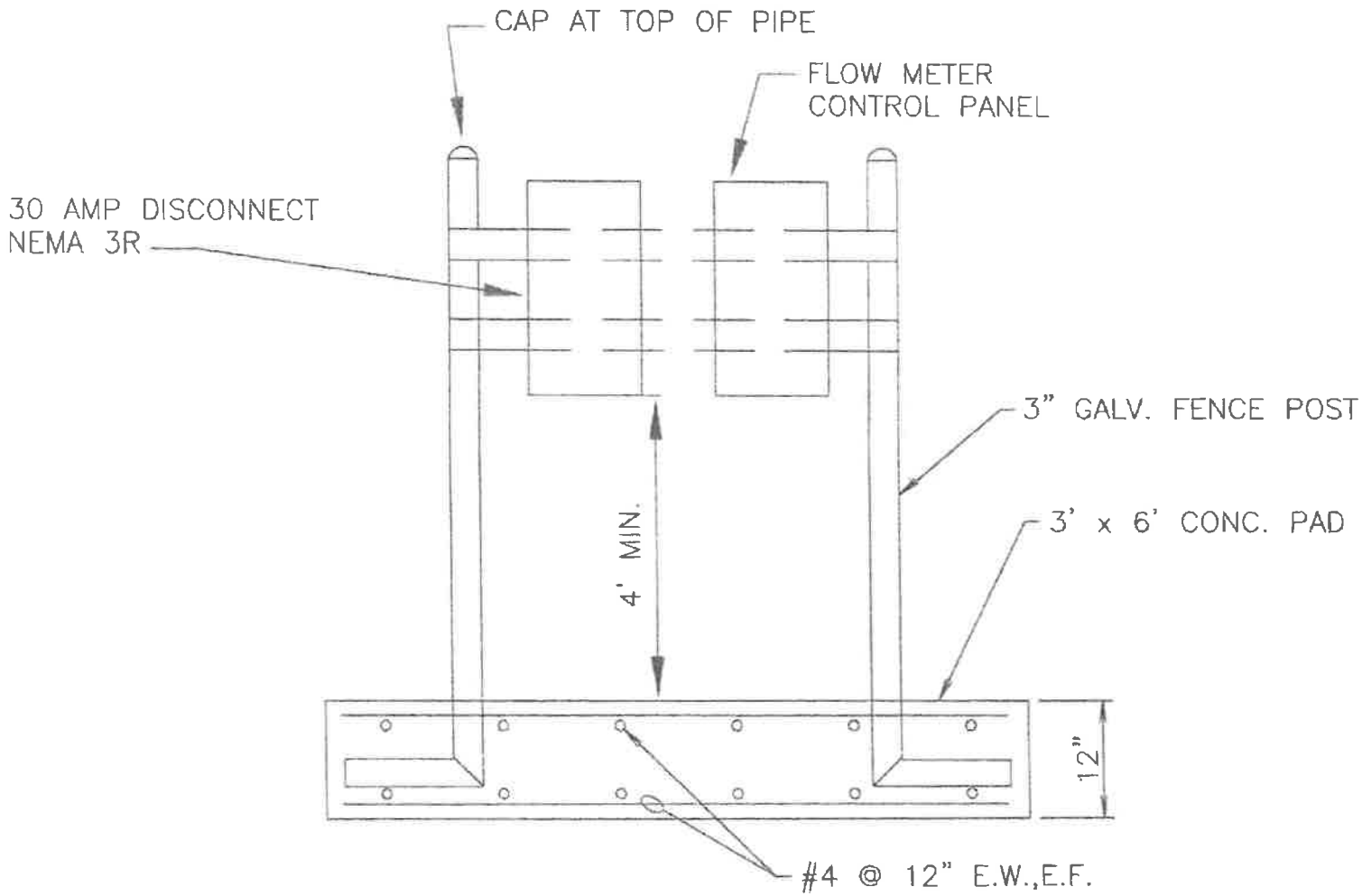

FLOW METER CONTROL PANEL PAD DETAIL

NOT TO SCALE

HAMILTON COUNTY WATER & WASTEWATER TREATMENT AUTHORITY
SD-FM-7

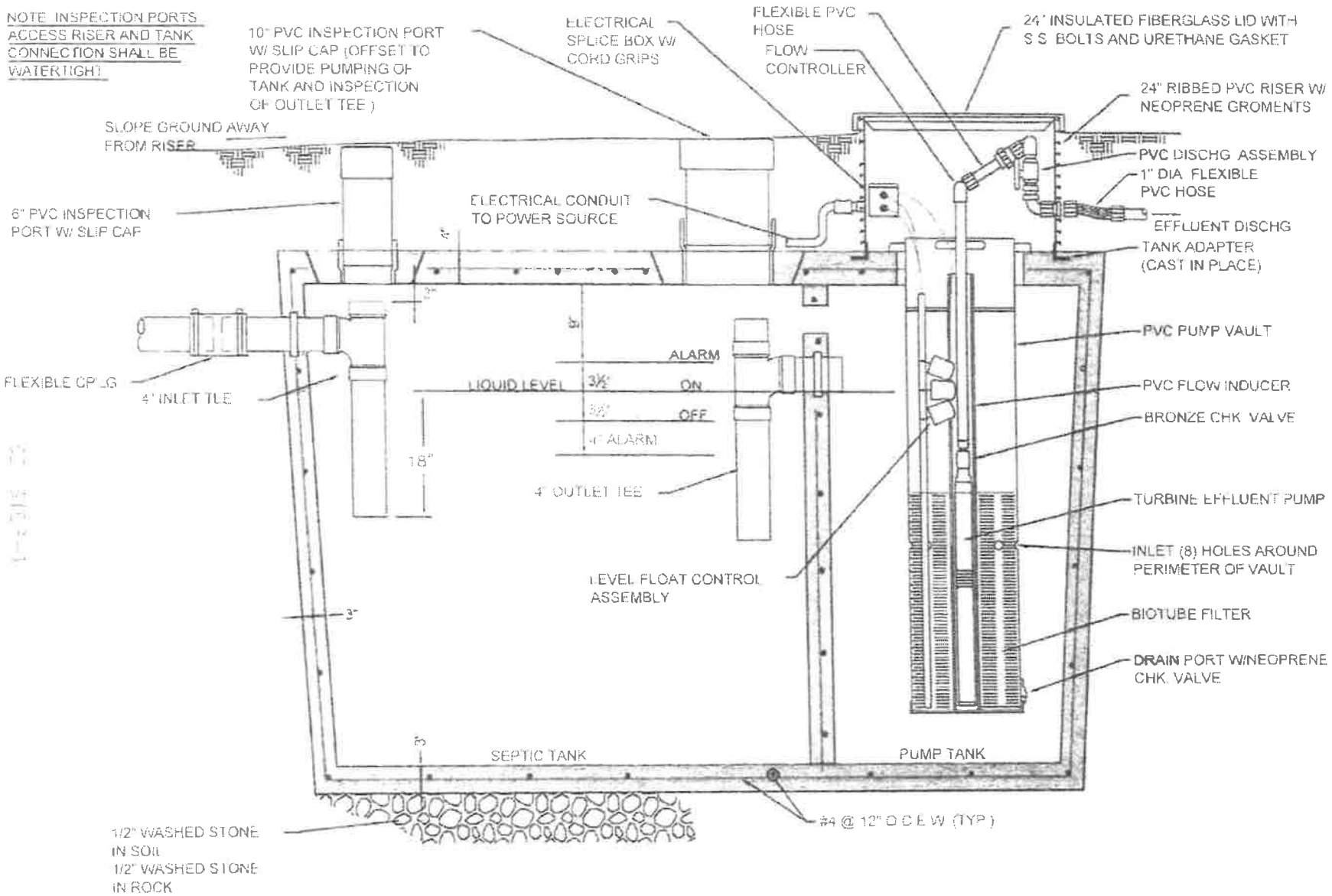

HAMILTON COUNTY WATER & WASTEWATER TREATMENT AUTHORITY

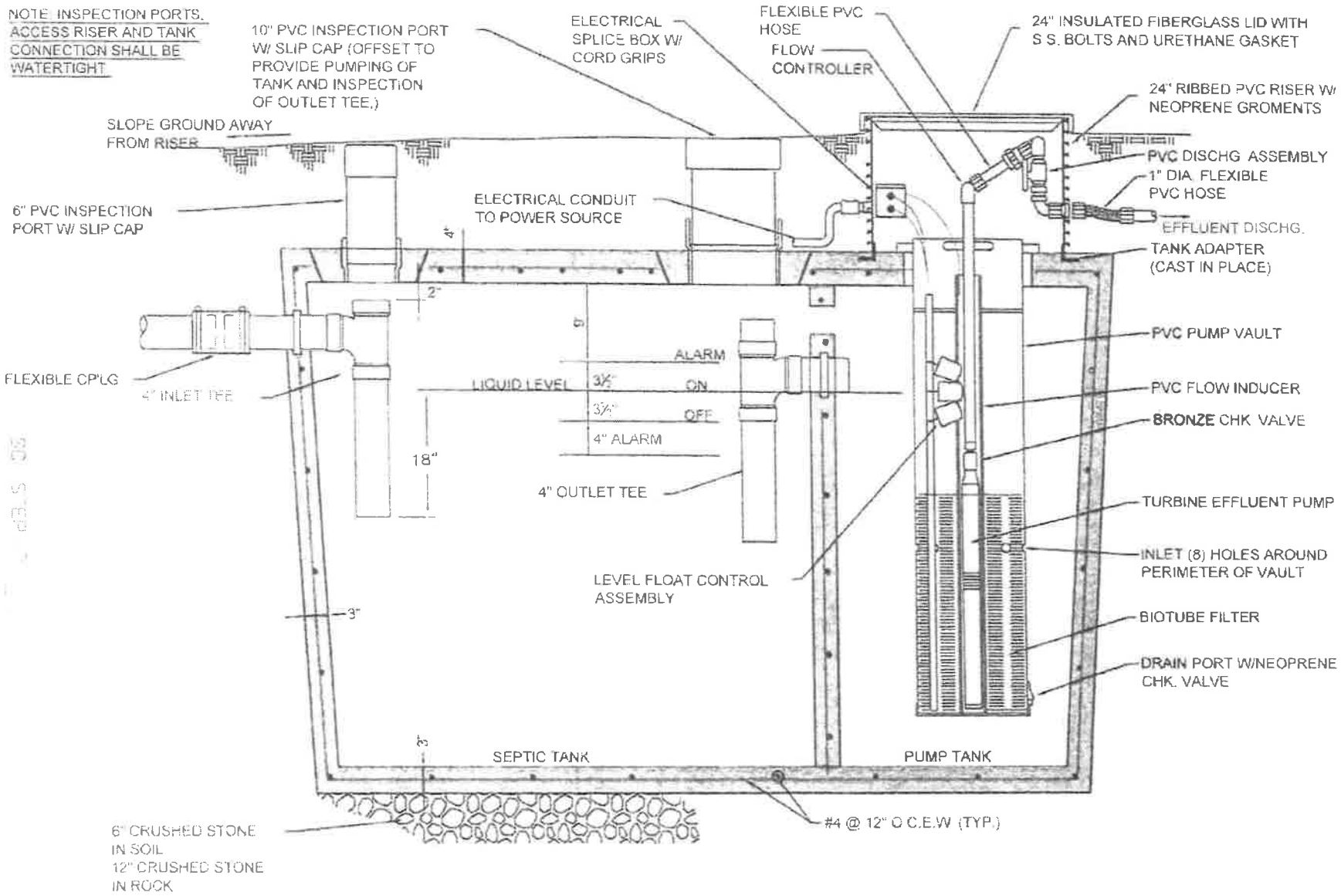

HAMILTON COUNTY WATER & WASTEWATER TREATMENT AUTHORITY

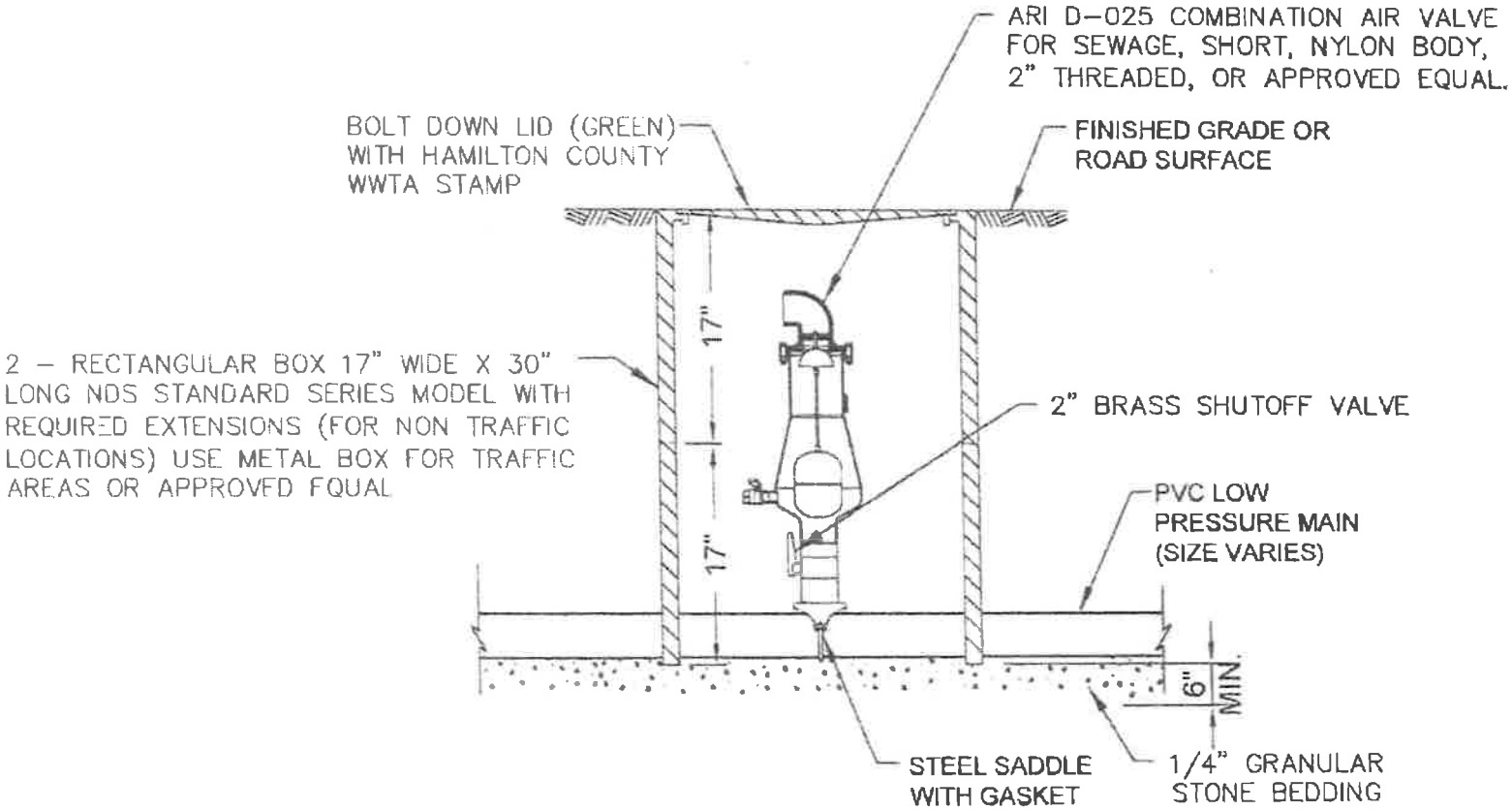

SN-STEP-3

SEPTIC TANK EFFLUENT PUMP (STEP) AIR RELEASE VALVE

HAMILTON COUNTY WATER & WASTEWATER TREATMENT AUTHORITY

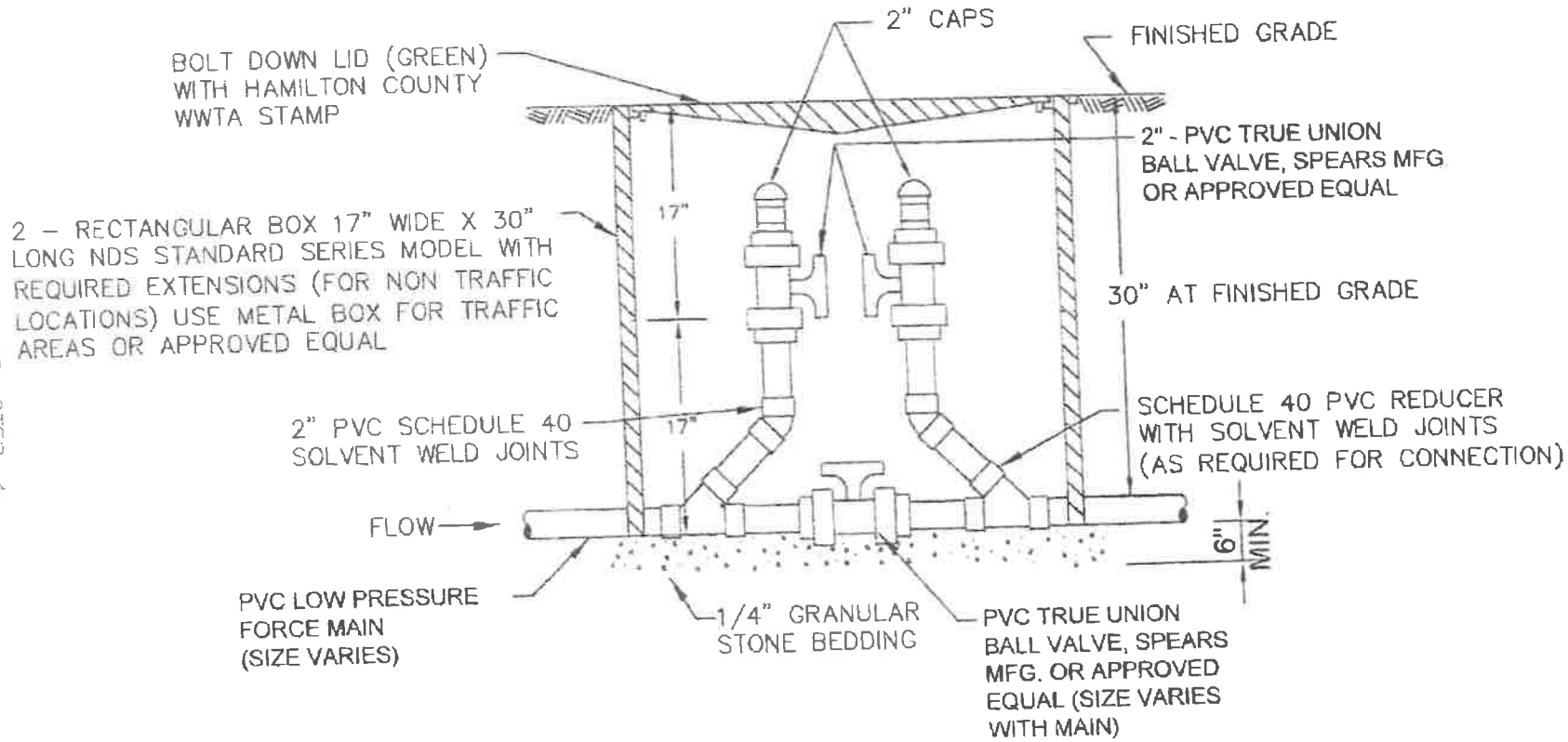

SEPTIC TANK EFFLUENT PUMP (STEP) INLINE CLEANOUT

HAMILTON COUNTY WATER & WASTEWATER TREATMENT AUTHORITY

SD- STEP – 4

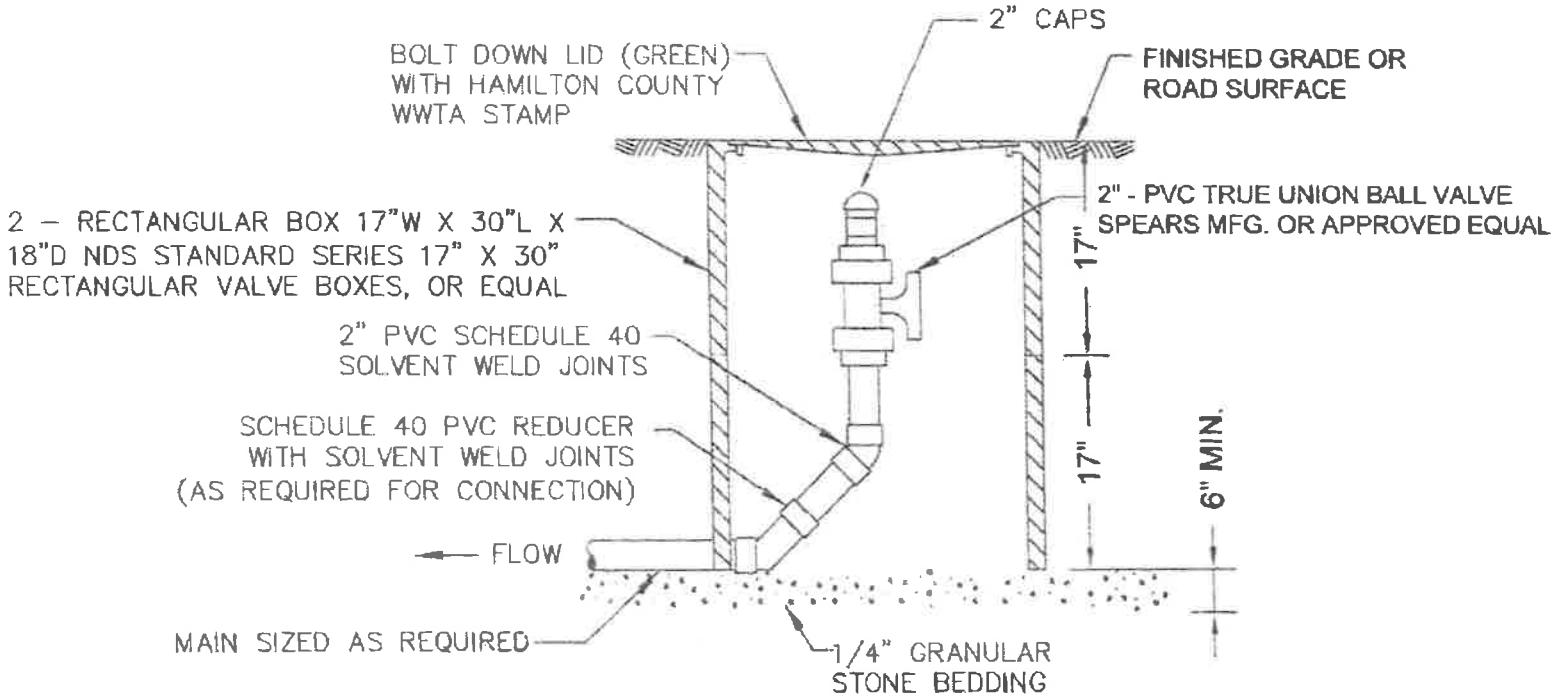

SEPTIC TANK EFFLUENT PUMP (STEP) TERMINAL CLEANOUT

HAMILTON COUNTY WATER & WASTEWATER TREATMENT AUTHORITY

SD-STEP-5

NOTES

1. ALL MATERIALS, DESIGN, MANUFACTURE, PHYSICAL TEST REQUIREMENTS, FINISH, MARKING, INSPECTION, REJECTION, AND REPAIRS TO MEET ASTM C478 FOR PRECAST REINFORCED CONCRETE MANHOLE RISERS AND CONES EXCEPT AS MAY BE MODIFIED IN THESE SPECIFICATIONS.

2. SIZE AND LOCATE PIPE CUTOUTS AS REQUIRED.

3. MANHOLE STEPS – SEE DETAIL OF STANDARD MANHOLE STEPS, SD–MH–7.

4. END–OF–LINE MANHOLES THAT HAVE FUTURE EXTENSIONS AND THAT ARE LOCATED IN PAVEMENT SHALL BE BACKFILLED WITH FLOWABLE FILL OR 33–C* STONE (CRUSHER RUN). THE BACKFILL SHALL BE COMPACTED TO 6–INCH LIFTS, AND SHALL EXTEND TEN (10') FEET FROM THE MANHOLE ALONG EACH TRENCH.

5. A MAXIMUM OF ONE CONCRETE RING MAY BE USED FOR FINISHED GRADE ELEVATION ADJUSTMENT OF UP TO 6" ON NEW CONSTRUCTION.

6. FLAT TOP MANHOLES SHALL NOT BE USED.

7. ON STREET GRADES OF 5% OR MORE, RINGS MUST BE POURED IN PLACE ON PROPER GRADE FOR EVEN OR SMOOTH TRANSITION.

* "33–C (CRUSHER RUN)" – 303–01, TYPE A, GRADING D ("33–C"), TENNESSEE DOT SPECIFICATIONS ("33–P" WITHOUT ADDED WATER)

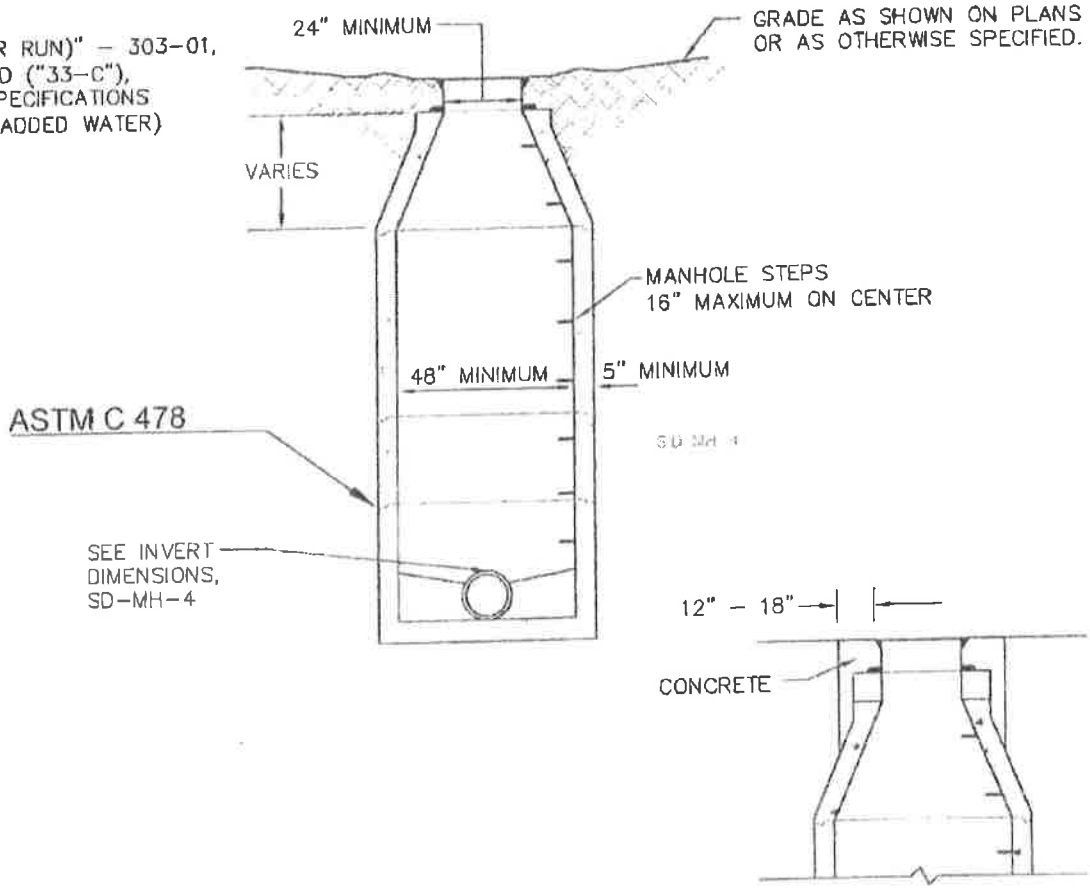

FRAME AND COVER AFTER PAVING

(SEE SD–MH–8)

NOTES

1. TRIM PROTRUDING GASKET INSIDE AND OUTSIDE.
2. CLEAN ALL DEBRIS FROM JOINTS PRIOR TO GASKET APPLICATION.

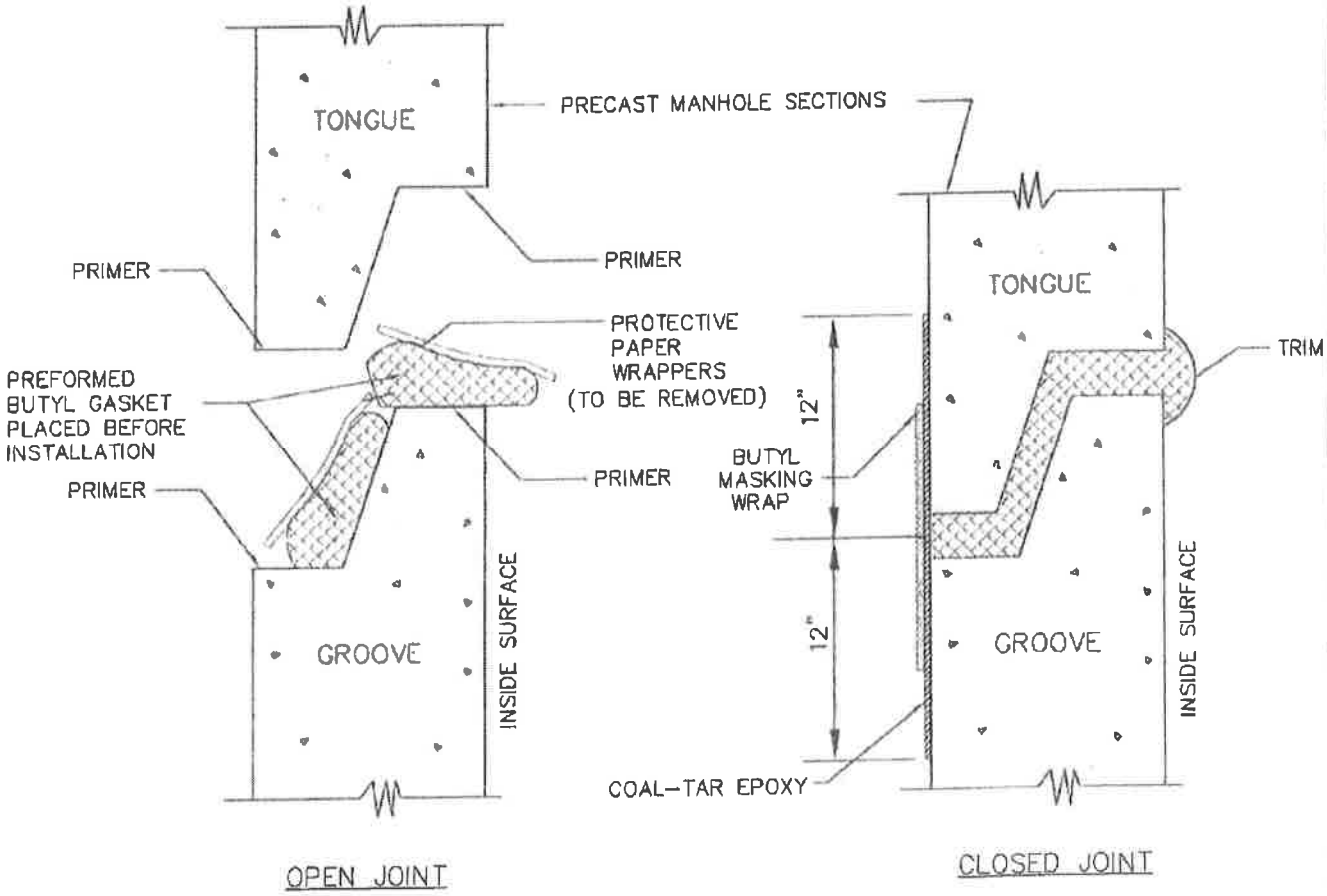

JOINT AND COAT FOR
PRECAST MANHOLE SECTIONS

HAMILTON COUNTY WATER & WASTEWATER TREATMENT AUTHORITY
SD-MH-2

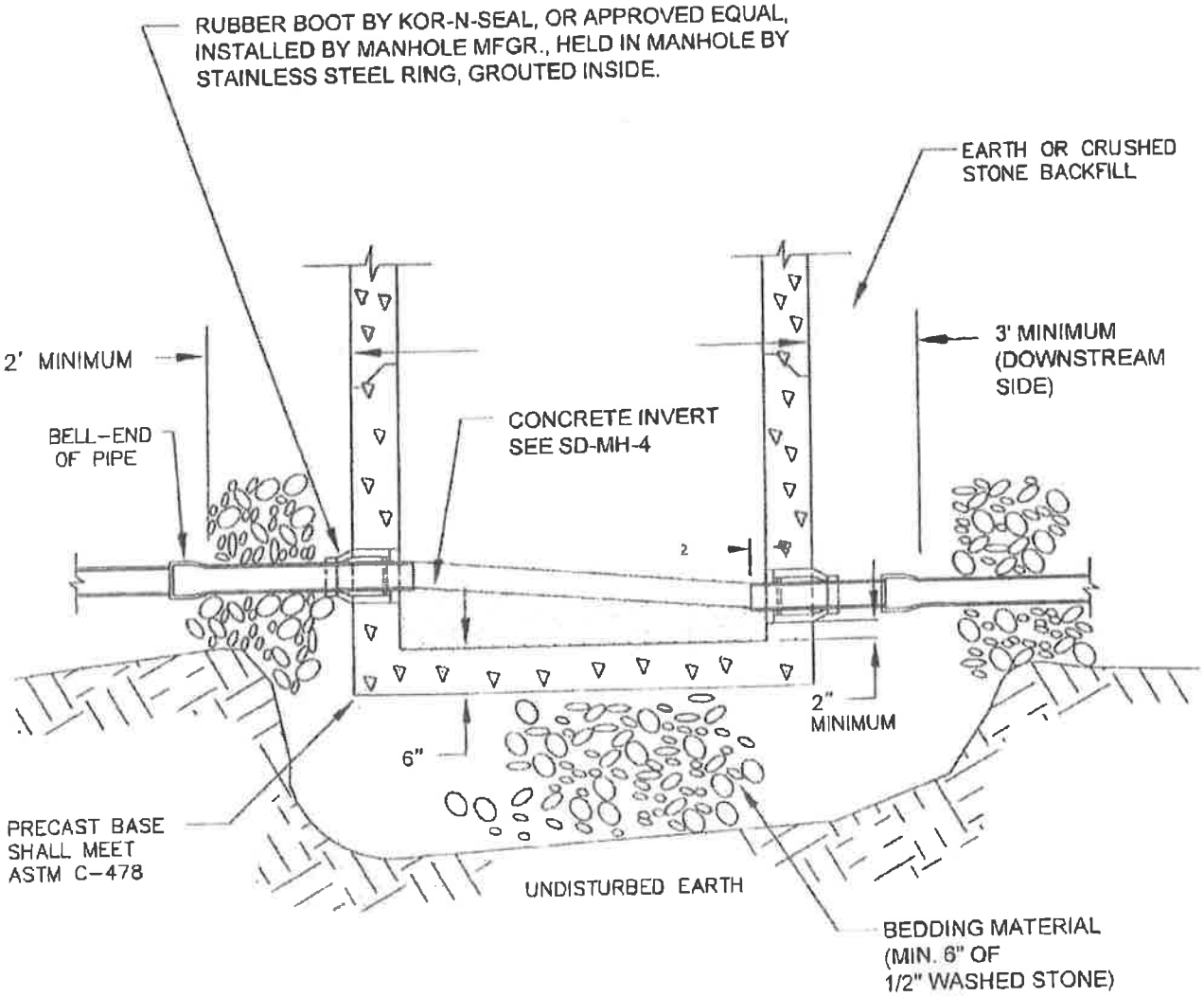

BOOTED, TUB-BOTTOM MANHOLE

HAMILTON COUNTY WATER & WASTEWATER TREATMENT AUTHORITY

SD-MH-3

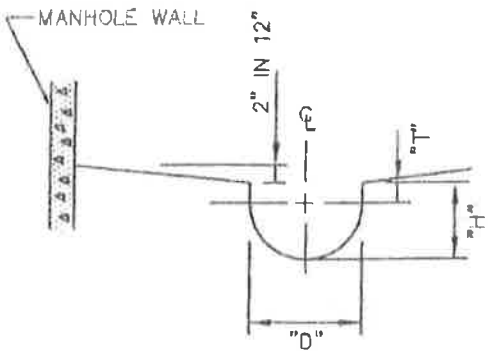

INVERT SECTION

TABLE I		
"D"	"T"	"H"
INSIDE DIA. PIPE	VERTICAL TANGENT	HEIGHT OF H O TABLE
8"	2 1/2"	6 1/2"
10"	3"	8"
12"	3 1/2"	9 1/2"
15"	4 1/2"	12"
18"	5 1/2"	14 1/2"
21"	6 1/2"	17"
24"	7 1/2"	19 1/2"
30"	9"	24"
36"	11"	29"

NOTE

"H" AND "T" DIMENSIONS APPLY AT BOTH THE UPSTREAM AND DOWNSTREAM EDGE OF MANHOLE. SEE TABLE 1

TABLE II GOVERNING DIMENSIONS FOR MANHOLE INVERTS			
PIPE SIZE	Δ ANGLE	BASE DIA.	R*
8" THRU 12"	0° TO 90	4'	1'-6"
15"	0 TO 60	4'	1'-10"
15"	60 TO 90	4'	1'-10"
18"	0 TO 60	4'	2'-3"
18"	60 TO 90	4'	1'-10"
21"	0 TO 60	4'	2'-7"
21"	60 TO 90	5'	2'-4"
24"	0 TO 45	4'	3'-0"
24"	45 TO 90	5'	2'-3"
30"	0 TO 60	5'	3'-9"
30"	60 TO 90	6'	2'-8"
36"	0 TO 30	6'	4'-6"
36" & LARGER	0 TO 90	CAST IN PLACE MH BASE OR PRE-BED MH BASE & ELBOW UNITS.	

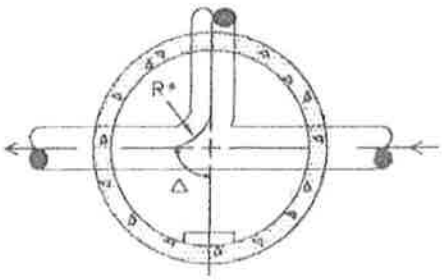

INVERT PLAN

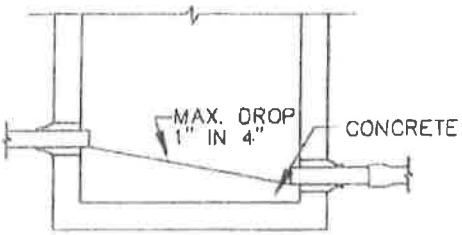

INVERT DETAIL
(WITH DROP LESS THAN 12")

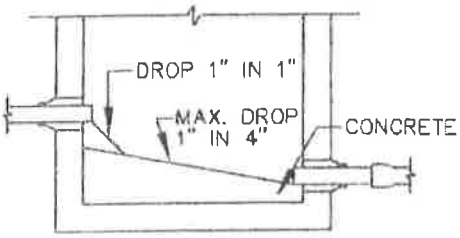

INVERT DETAIL
(WITH DROP OF 12" TO LESS THAN 24")

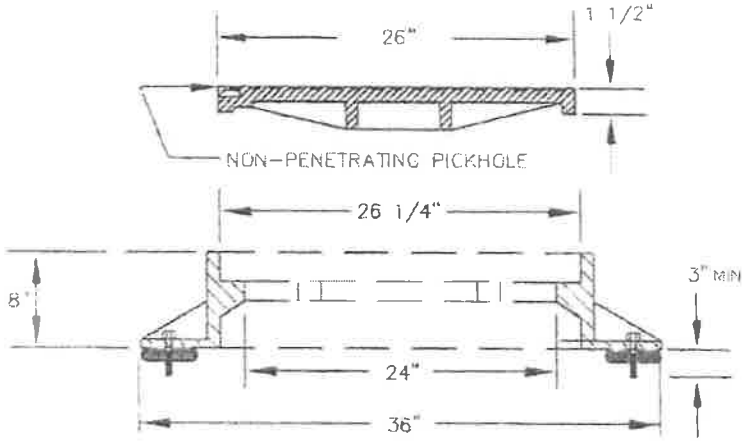

SECTION
STANDARD FRAME AND COVER

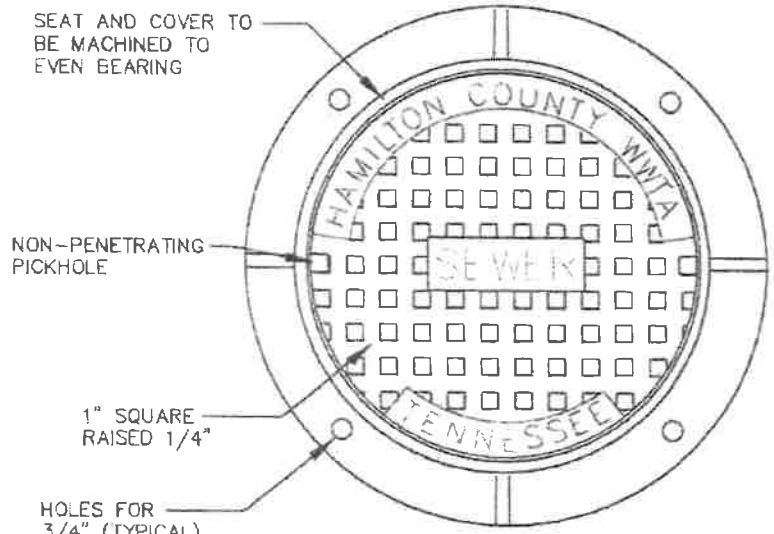

PLAN – FRAME AND COVER

ACHESON FOUNDRY (STANDARD) A-2024-81H
ACHESON FOUNDRY (WATER-TIGHT) A-2624-71H
OR APPROVED EQUAL

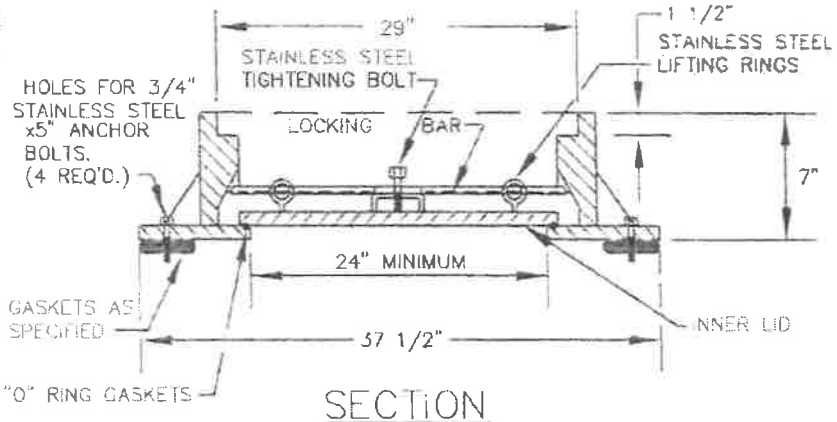

SECTION
WATER-TIGHT FRAME AND COVER

SPECIFIED MINIMUM WEIGHTS		
	STANDARD	WATER-TIGHT
COVER FRAME	165 LBS. 185 LBS.	190 LBS. 400 LBS.
TOTAL	350 LBS.	590 LBS.

NOTES

1. MANUFACTURER SHALL CERTIFY TRAFFIC BEARING CAPACITY OF FRAMES AND COVERS.
2. MANHOLES IN PAVED AREAS MAY NOT REQUIRE ANCHOR BOLTS.
3. BEARING SURFACES BETWEEN COVER AND FRAME SHALL BE MACHINED TO PREVENT ROCKING.
4. MANHOLES IN EASEMENTS REQUIRE ANCHOR BOLTS.

MANHOLE FRAME AND COVER

HAMILTON COUNTY WATER & WASTEWATER TREATMENT AUTHORITY

SD-MH-5

NOTES

1. SET INLET FROM DROP TO MATCH CROWNS WITH OUTLET EXCEPT THAT MINIMUM FALL ACROSS MANHOLE INVERT MUST BE 3".
2. FOR DETAILS NOT SHOWN, SEE STANDARD MANHOLE DETAILS.
3. THE DROP PIPE SHALL BE CONSTRUCTED OF THE SAME MATERIAL AS THAT OF THE INCOMING LINE.
4. ON GRAVITY LINE GRADES OF 12.5% OR GREATER, 11-¼° ELBOW MAY BE USED UP TO 24% GRADE; 22-½° ELBOW MAY BE USED UP TO 49% GRADE AND 45° ELBOW MAY BE USED BEYOND 50% GRADE AND ENTIRE DROP SHALL BE DUCTILE IRON.

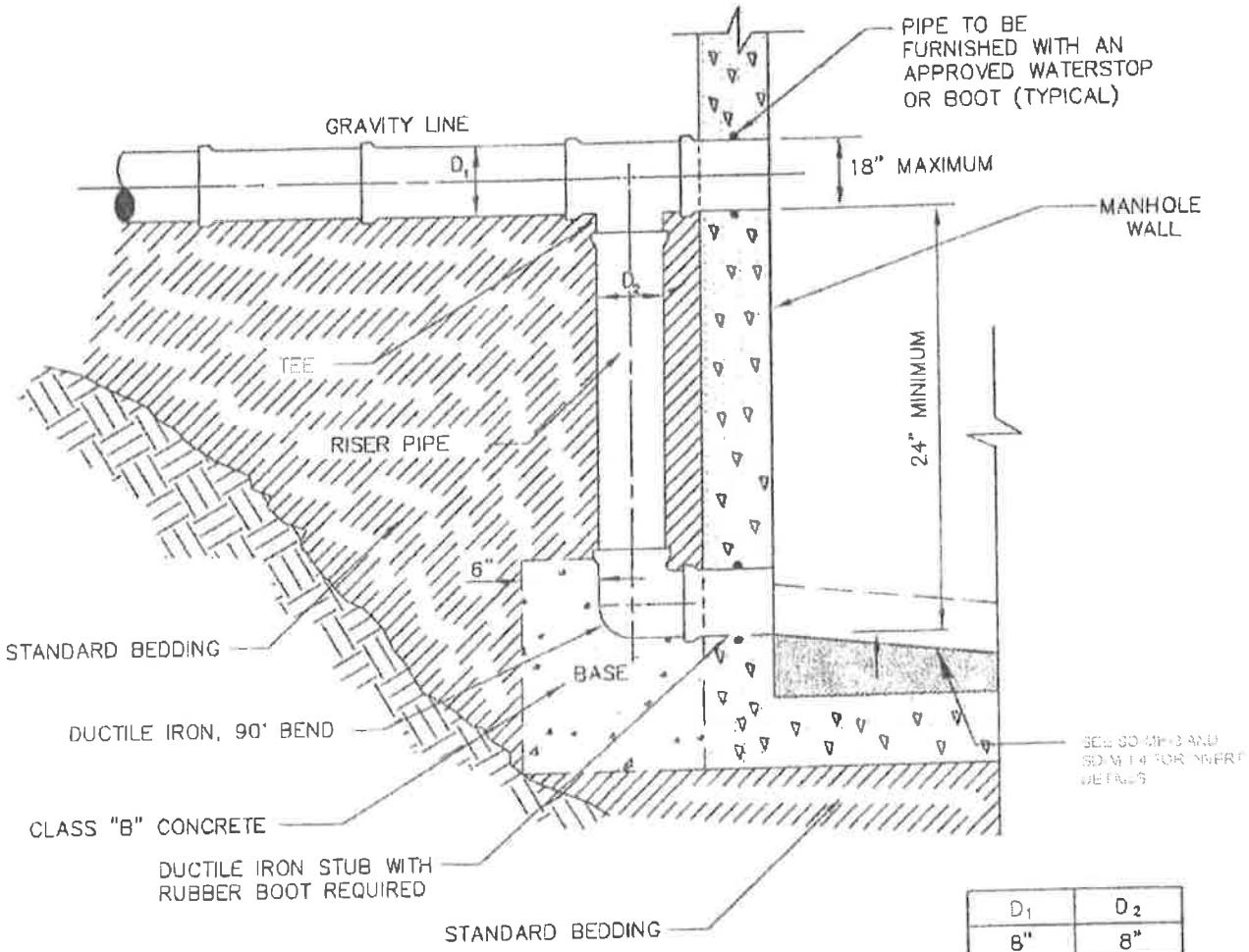

D_1	D_2
8"	8"
10"	8"
12"	10"
15"	12"
18"	12"

BASE NOTES:
1. MINIMUM DISTANCE BETWEEN BOTTOM OF DI AND MANHOLE BOTTOM IS 8".
2. AT MINIMUM THERE SHOULD BE 12 ½" TOTAL VERTICAL HEIGHT OF CONCRETE.
3. BASE NEEDS TO BE AT LEAST 36" WIDE FOR SUPPORT OF DI ELBOW.

STANDARD DROP MANHOLE

HAMILTON COUNTY WATER & WASTEWATER TREATMENT AUTHORITY

SD-MH-6

NOTES:

1. STEPS OF 3/8" STEEL REINFORCED ROD ENCAPSULATED IN POLYPROPYLENE PLASTIC.
2. RISER SECTIONS SHALL BE SET SO THAT STEPS ALIGN VERTICALLY, AND DO NOT PROTRUDE BEYOND VERTICAL FACE OF INSIDE MANHOLE CONE.

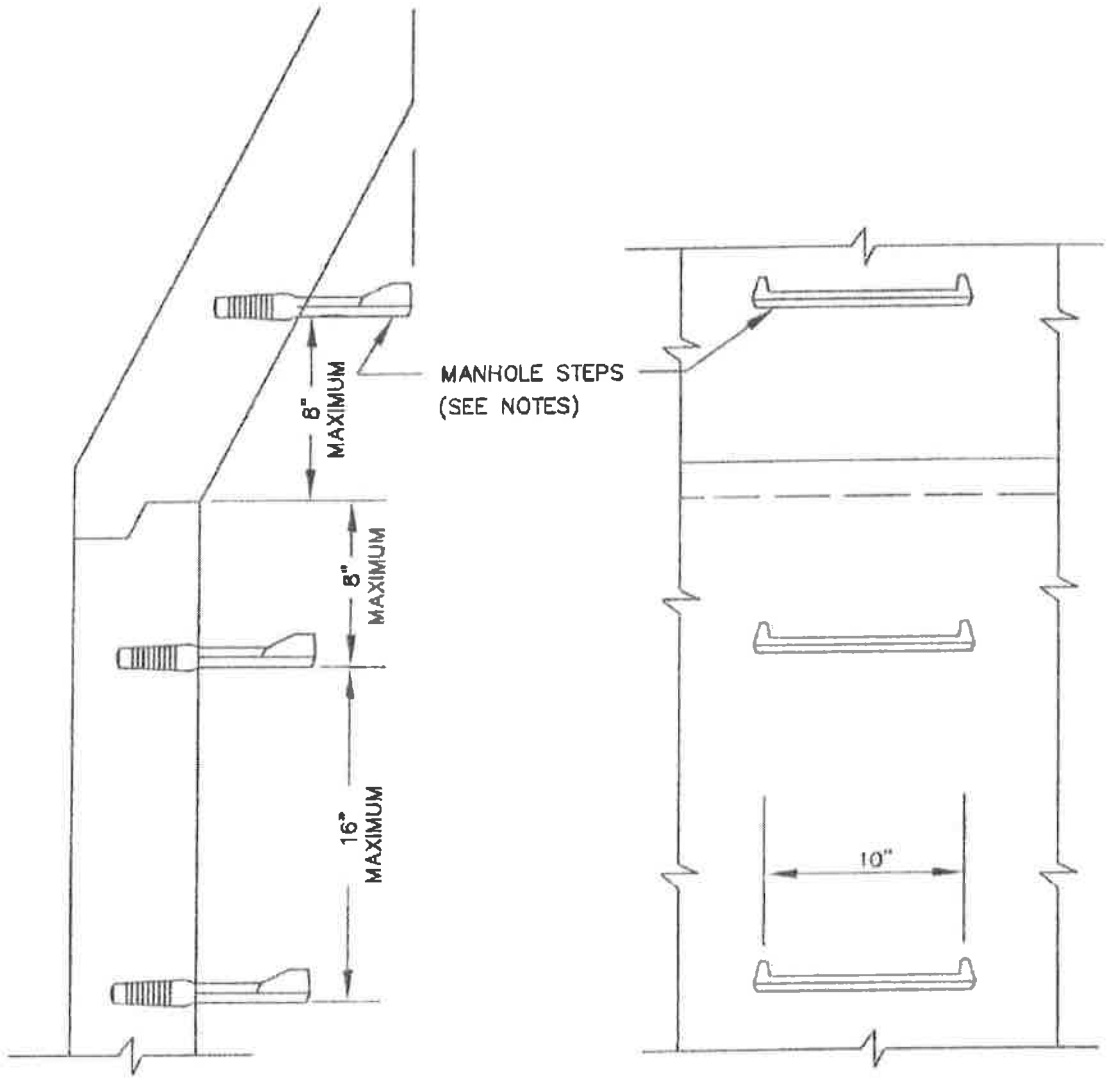

SECTION

ELEVATION

MANHOLE STEPS

HAMILTON COUNTY WATER & WASTEWATER TREATMENT AUTHORITY

SD-MH-7

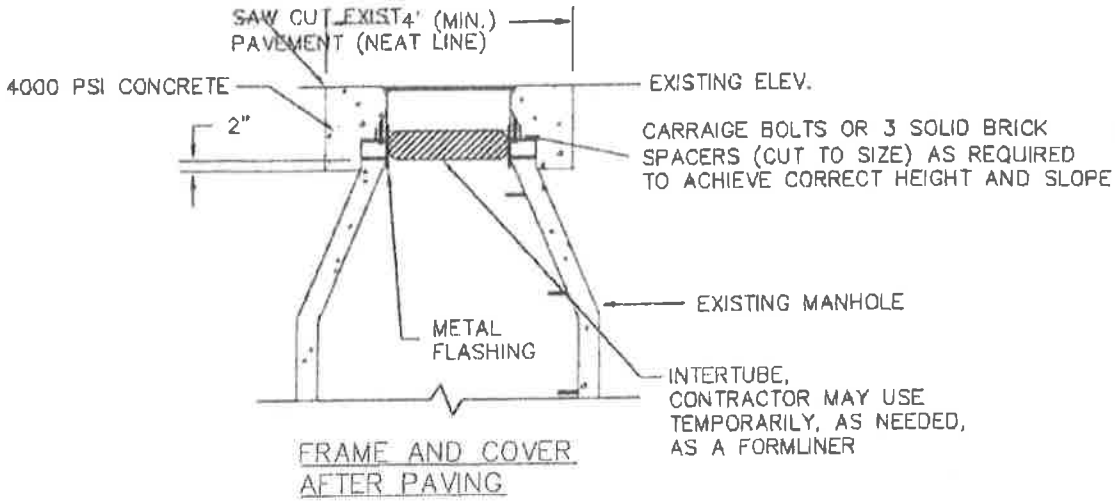

FRAME AND COVER AFTER PAVING

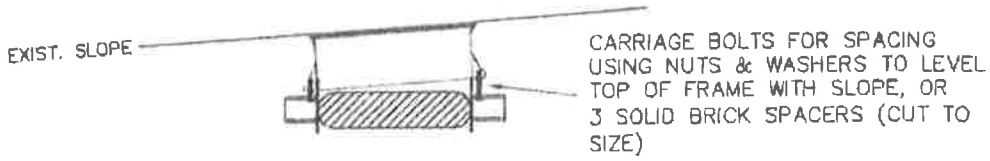

FRAME ON SLOPE

PLAN–FRAME AND COVER

ACHESON FOUNDRY (STANDARD) A–2024–81H
ACHESON FOUNDRY (WATER–TIGHT)A–2624–71H
OR APPROVED EQUAL

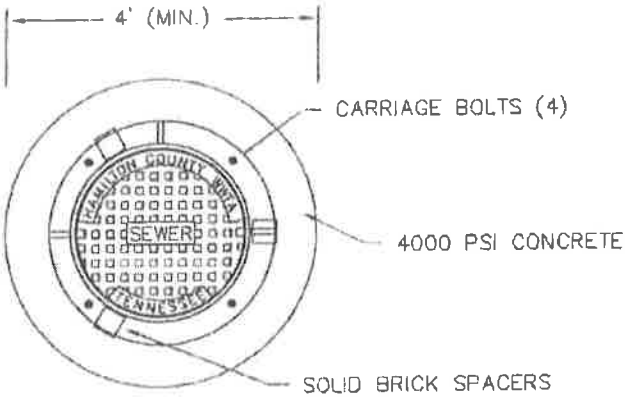

NOTES:

1. CONTRACTOR SHALL TAKE ALL NECESSARY PRECAUTIONS TO ENSURE THAT MORTAR AND CONSTRUCTION MATERIAL DOES NOT DROP INTO MANHOLE OR SEWER LINES
2. CONTRACTOR SHALL MAINTAIN TRAFFIC BARRIERS AND STEEL PLATES AROUND MANHOLE UNTIL CONCRETE CURES

STANDARD DETAIL FOR RAISING MANHOLE FRAMES ON CONCRETE MANHOLES

HAMILTON COUNTY WATER & WASTEWATER TREATMENT AUTHORITY

SD–MH–8

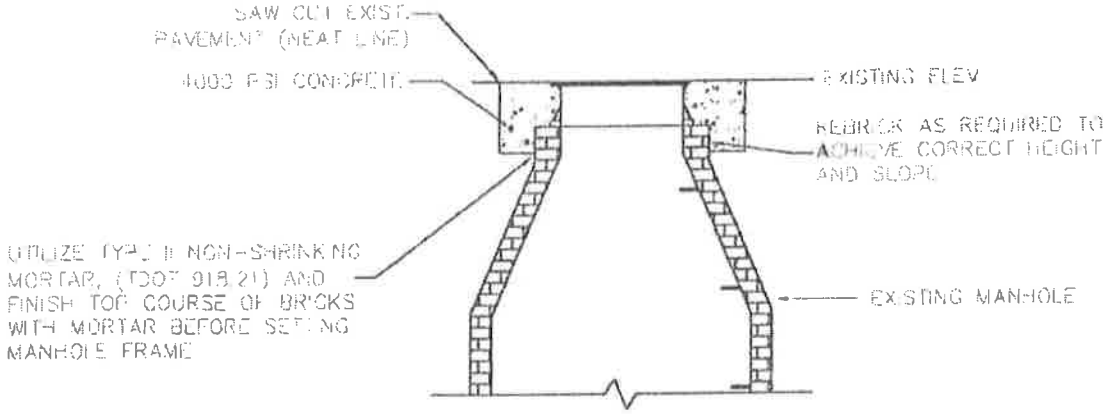

FRAME AND COVER AFTER PAVING

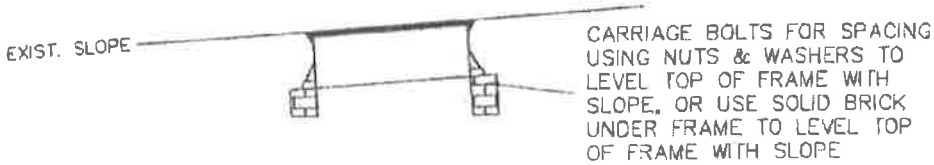

FRAME ON SLOPE

PLAN–FRAME AND COVER

ACHESON FOUNDRY (STANDARD) A–2024–81H
ACHESON FOUNDRY (WATER–TIGHT)A–2624–71H
OR APPROVED EQUAL

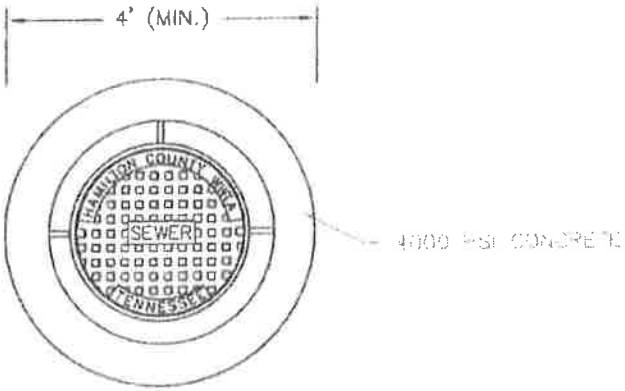

NOTES:

1. CONTRACTOR SHALL TAKE ALL NECESSARY PRECAUTIONS TO ENSURE THAT MORTAR AND OTHER CONSTRUCTION MATERIALS DO NOT DROP INTO MANHOLE OR SEWER LINES
2. CONTRACTOR SHALL MAINTAIN TRAFFIC BARRIERS AND STEEL PLATES AROUND MANHOLE UNTIL CONCRETE CURES

STANDARD DETAIL FOR RAISING MANHOLE FRAMES ON BRICK MANHOLE

HAMILTON COUNTY WATER & WASTEWATER TREATMENT AUTHORITY

ID-MH-3A

NOTES

1. LOCATE 4" VENT PIPE OUT OF TRAVELED WAY IN BACK OF CURB OR SIDEWALK OR AS CALLED FOR ON PLANS.

2. TOP OF VENT SHALL BE A MINIMUM OF 1' ABOVE THE 100 YEAR FLOOD ELEVATION

*3. USE TREATED SUPPORT POST WHEN H > 3'.

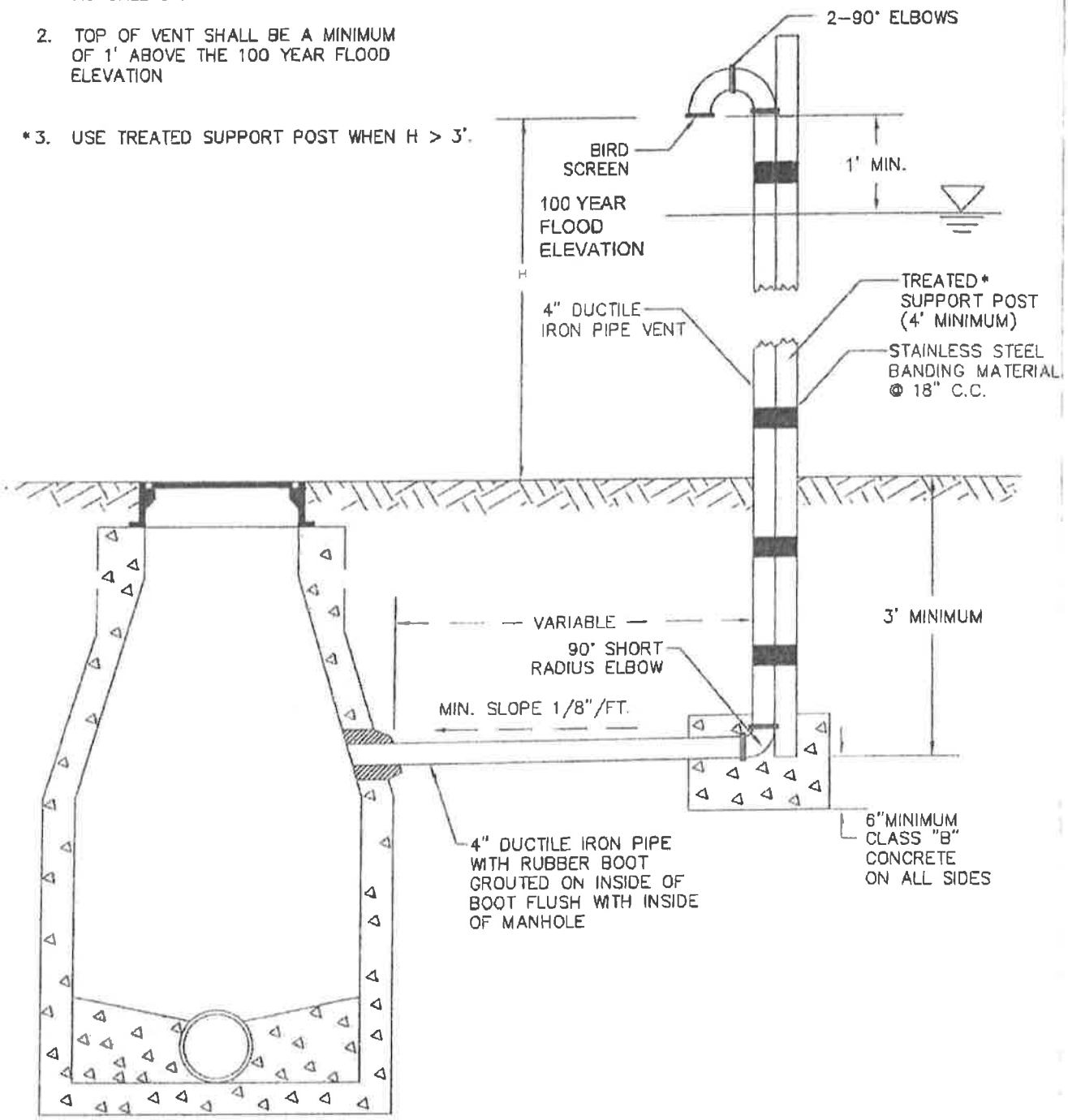

STANDARD MANHOLE VENT

HAMILTON COUNTY WATER & WASTEWATER TREATMENT AUTHORITY

SD-MH-9

NOTES

1. THE SHALLOW MANHOLE IS ONLY USED WITH SPECIFIC APPROVAL BY WWTA CHIEF ENGINEER OR SUPERINTENDENT.

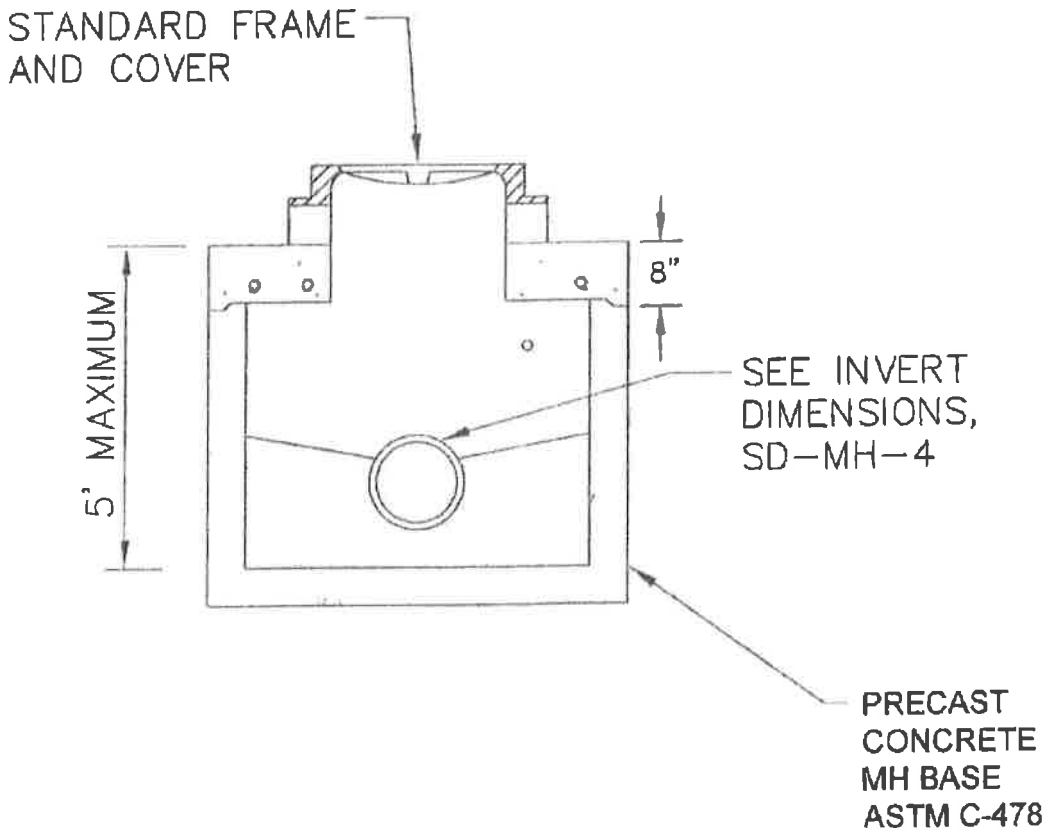

SPECIAL SHALLOW MANHOLE

HAMILTON COUNTY WATER & WASTEWATER TREATMENT AUTHORITY
SD-MH-10

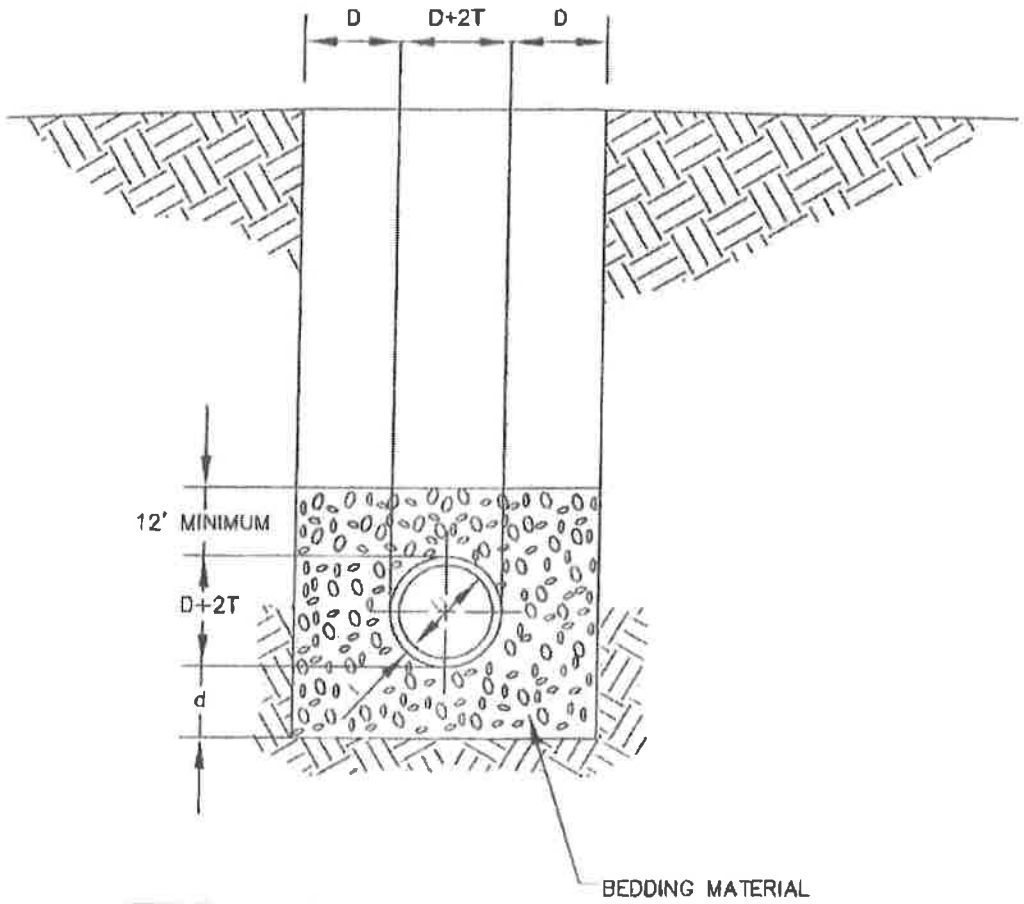

D	d
< 4"	4"
4-6"	6"
8"	6"
10"	8"
12"	8"
15"	8"
18"	8"
21"	10"
24"	10"

TRENCH BEDDING (CLASS "I", ASTM D 2321)

MATERIAL SHALL BE ANGULAR 1/4 TO 1/2 IN. GRADED STONE PAYMENT FOR THE BEDDING SHALL BE INCLUDED IN THE UNIT PRICE BID PER LINEAR FOOT PIPE FOR VARIOUS TYPES, SIZES, AND DEPTHS LISTED IN THE BID SCHEDULE.

TYPICAL TRENCH AND BEDDING FOR GRAVITY AND FORCE MAIN

HAMILTON COUNTY WATER & WASTEWATER TREATMENT AUTHORITY

SD-GEN-1

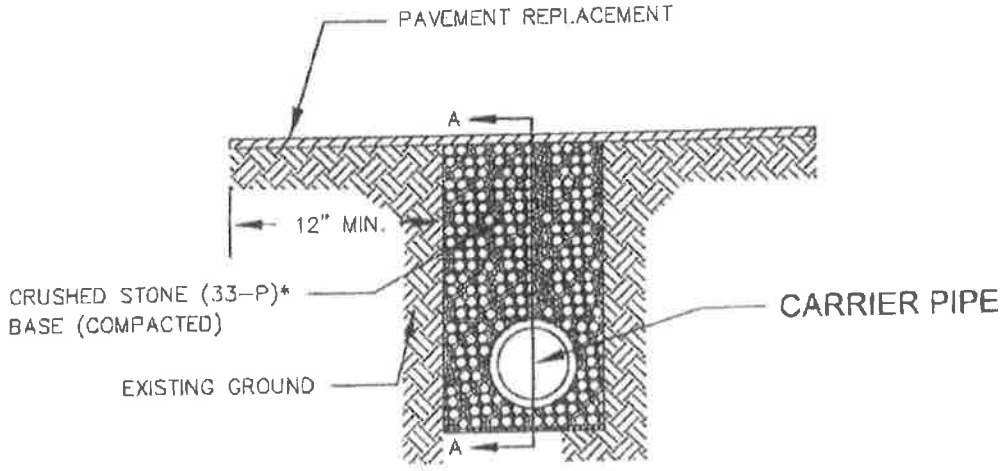

TYPICAL SECTION IN TRENCH CHECK DAM

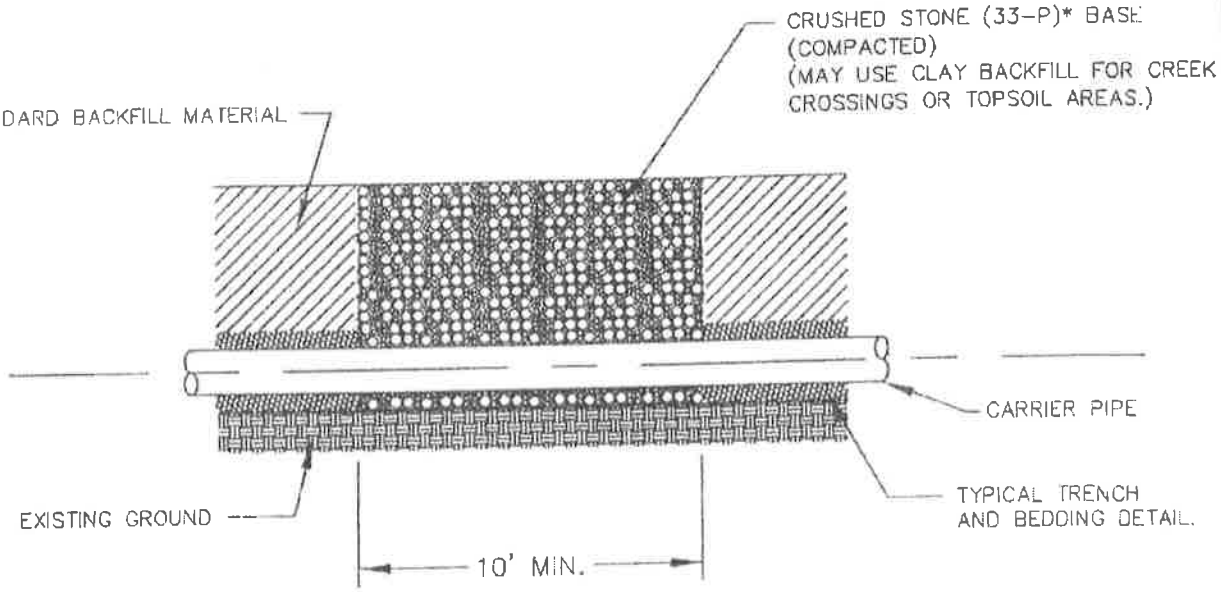

SECTION A - A

* "33-P (PUG)" - 303.01, TYPE A, GRADING D (33-P), TENNESSEE DOT SPECIFICATIONS.

NOTE
A CHECK DAM SHALL BE LOCATED EVERY 500' ALONG THE TRENCH UNLESS SHOWN OTHERWISE ON THE PLANS.

TRENCH CHECK DAM

HAMILTON COUNTY WATER & WASTEWATER TREATMENT AUTHORITY
SD-GEN-2

NOTES

1. CLASS "B" CONCRETE IS TO BE POURED 16 HOURS BEFORE PLACING BACKFILL, AND IN A MANNER THAT PREVENTS THE FLOATING OF PIPES.
2. PIPES ARE TO BE LAID BEFORE THE CONCRETE HARDENS.

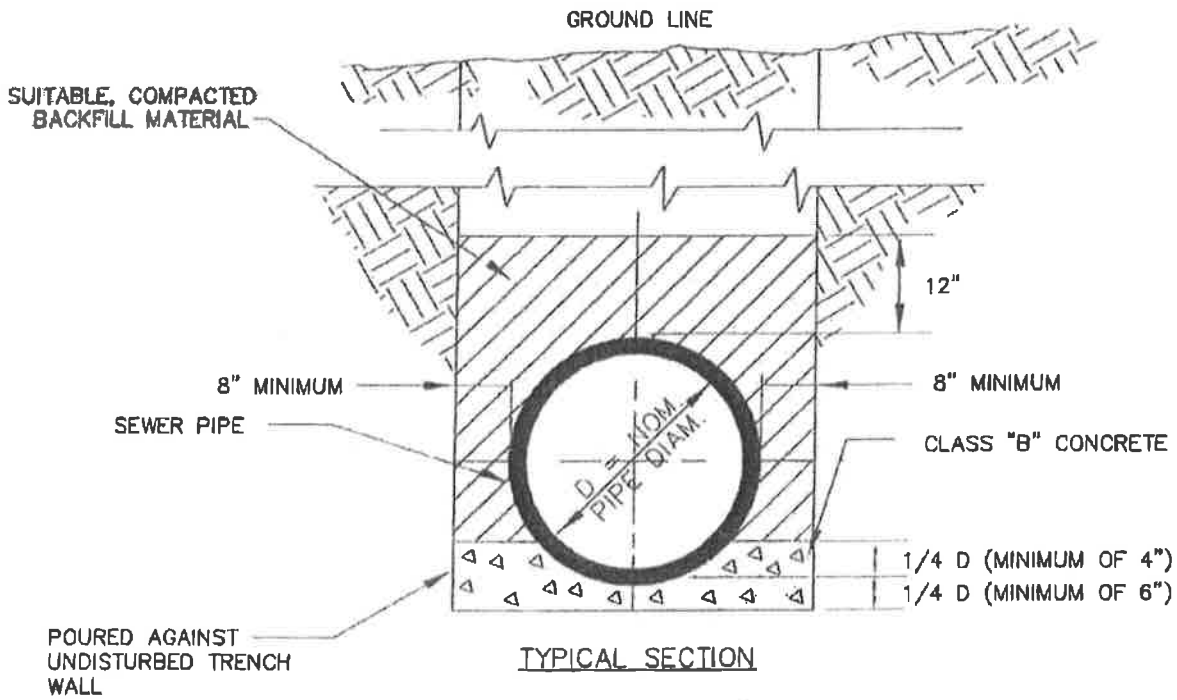

TYPICAL SECTION

CONCRETE CRADLE

HAMILTON COUNTY WATER & WASTEWATER TREATMENT AUTHORITY

SD-GEN-3

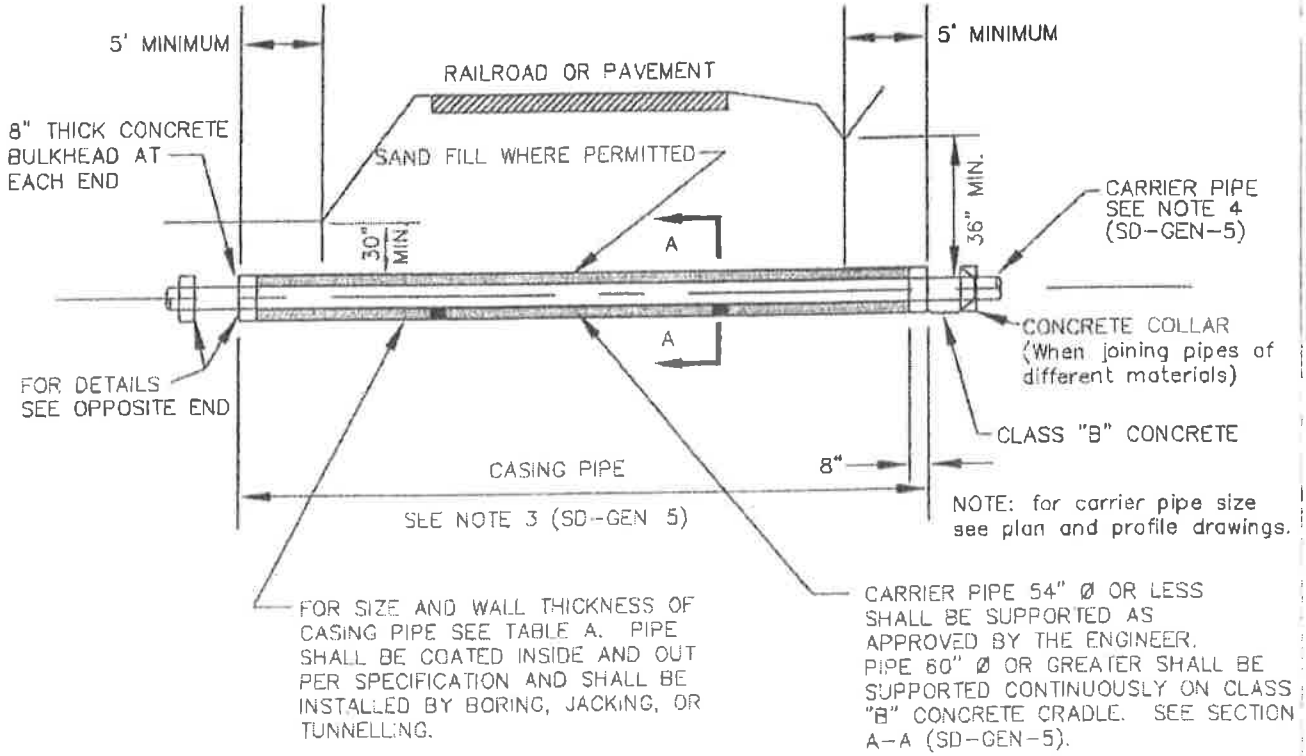

TABLE "A"

	PIPE SIZE		
	CARRIER PIPE (Inches)	CASING PIPE Dia. (Inches)	CASING PIPE STEEL PIPE Wall Thickness
DUCTILE IRON, PVC OR CAST IRON	8	16	1/4"
	10	20	5/16"
	12	24	3/8"
	14-16	30	1/2"
	18	36	1/2"
	24	36	1/2"
	30	54	See Table "B"
	36	54	"
	42	66	"
	48	72	"
	54	78	"
RCP	60	84	"
	66	96	"
	72	108	"
	84	120	"
	96	144	"

TABLE "B"

Gages of Liner Plate For Continuous Load-Carrying Structures

Nominal Dia. (Inches)	Height of Cover (Feet) 2-5	6-10	11-15	16-20	21-25	26-30	31-35	36-40	41-45
48	12	12	12	12	12	12	12	12	10
54	12	12	12	12	12	12	12	10	8
60	12	12	12	12	12	12	10	8	7
66	12	12	12	12	12	10	8	8	5
72	12	12	12	12	12	10	8	7	5
78	12	12	12	12	10	8	7	5	5
84	12	12	12	10	10	8	5	5	5
96	12	10	10	10	10	8	5	5	5
108	10	10	10	10	8	7	5	5	5
120	10	10	10	8	8	7	5	5	3
144	8	8	8	8	5	5	3	1	1

CASING PIPE

SIZE AND THICKNESS OF PIPE FOR HIGHWAY CROSSING

RAILROAD AND HIGHWAY CROSSING DETAIL

HAMILTON COUNTY WATER & WASTEWATER TREATMENT AUTHORITY

SD-GEN-4

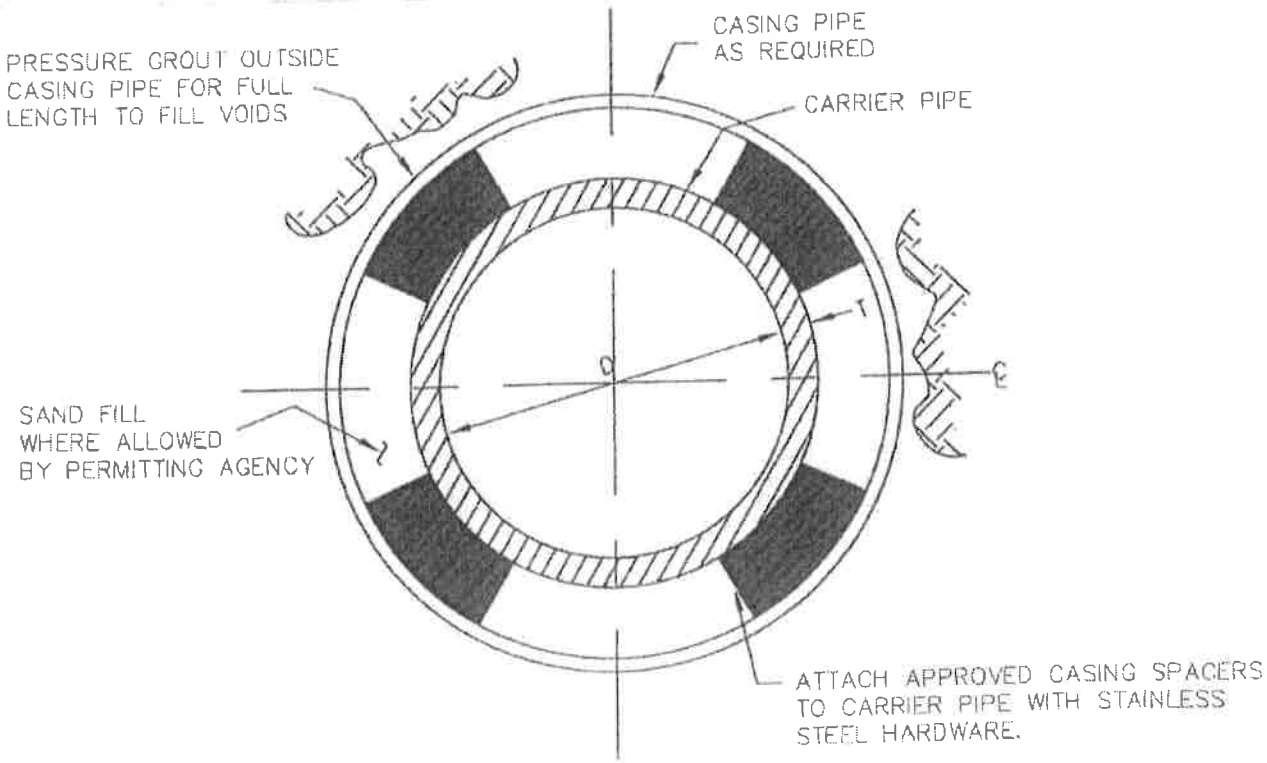

SECTION A–A

RAILROAD AND HIGHWAY CROSSING NOTES FOR PLACING SEWER LINES WITHIN THE RIGHT-OF-WAY OR CROSSING RAILROADS, STATE AND U.S. HIGHWAYS, AND DESIGNATED CITY STREETS

1. LINES CROSSING UNDER RAILROADS, PAVED ROADS, AND PAVED CROSSROADS WITHIN DESIGNATED CITY STREETS AND STATE AND U.S. HIGHWAY RIGHT-OF-WAY SHALL BE ENCASED AND INSTALLED BY BORING, JACKING, OR TUNNELLING. CASING PIPE SHALL EXTEND FROM TOE OF SHOULDER SLOPE TO TOE OF SHOULDER SLOPE ALL WORK SHALL BE DONE AS SHOWN ON THIS DRAWING.
2. ALL LINES SHALL HAVE A MINIMUM COVER OF 30" EXCEPT WHERE DEEPER COVER IS INDICATED ON THE DRAWINGS. ALL TRENCH EXCAVATION WITHIN THE RIGHT-OF-WAY AND NOT UNDER RAILROAD OR PAVING SHALL BE BACKFILLED BY TAMPING IN 6" LAYERS. ALL SURPLUS MATERIAL SHALL BE REMOVED FROM THE RIGHT-OF-WAY, AND THE EXCAVATION FINISHED FLUSH WITH SURROUNDING GROUND.
3. CASING PIPE SHALL BE EITHER STRAIGHT SEAM WELDED STEEL PIPE OR STEEL LINER PLATE, APPLICABLE AND SUITABLE TO METHOD OF INSTALLATION EMPLOYED (SEE TABLE "A", SD-GEN-4). ALL CASING PIPE SHALL BE COATED INSIDE AND OUT PER SPECIFICATIONS.
4. CARRIER PIPE FOR ALL LINES 6" TO 54" IN DIAMETER SHALL BE PVC, CAST OR DUCTILE IRON PIPE WITH "PUSH-ON" TYPE JOINTS. CARRIER PIPE 60" IN DIAMETER AND LARGER SHALL BE REINFORCED CONCRETE WITH "BELL & SPIGOT" JOINTS. FOR SIZE, SEE PLAN AND PROFILE DRAWINGS.
5. ALL INSTALLATIONS SHALL BE DONE TO LEAVE FREE FLOWS IN DRAINAGE DITCHES, PIPES, CULVERTS, OR OTHER SURFACE WATER DRAINAGE FACILITIES OF THE RAILROAD, HIGHWAY, STREET, OR ITS CONNECTIONS.
6. FOR HIGHWAY CROSSINGS, THE CONTRACTOR SHALL MAKE NECESSARY ARRANGEMENTS FOR TRAFFIC OVER THE CONSTRUCTION AREA DURING SUCH WORK AND SHALL PLACE NECESSARY BARRICADES, WARNING SIGNS, SIGNALS, LIGHTS, AND, IF NECESSARY, WATCHMEN FOR THE TRAVELING PUBLIC.

RAILROAD AND HIGHWAY
CROSSING DETAIL NO. 2

HAMILTON COUNTY WATER & WASTEWATER TREATMENT AUTHORITY

SD-GEN-5

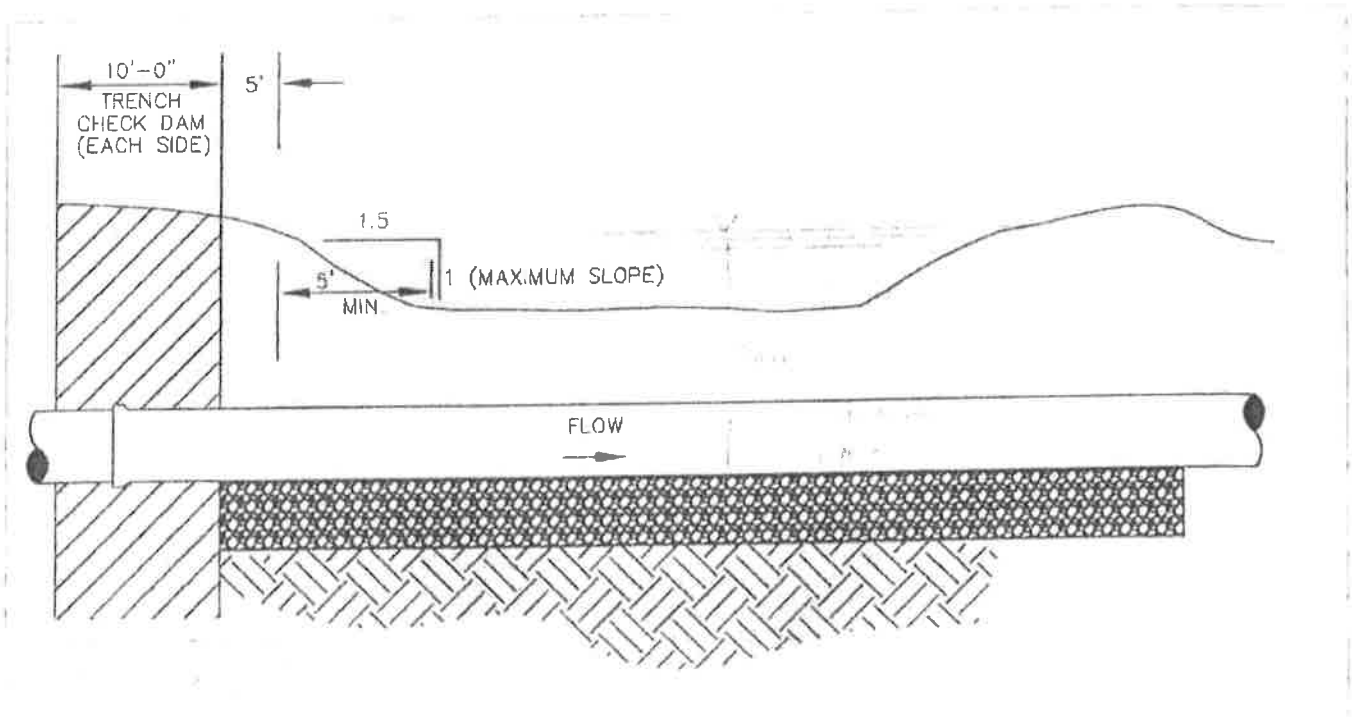

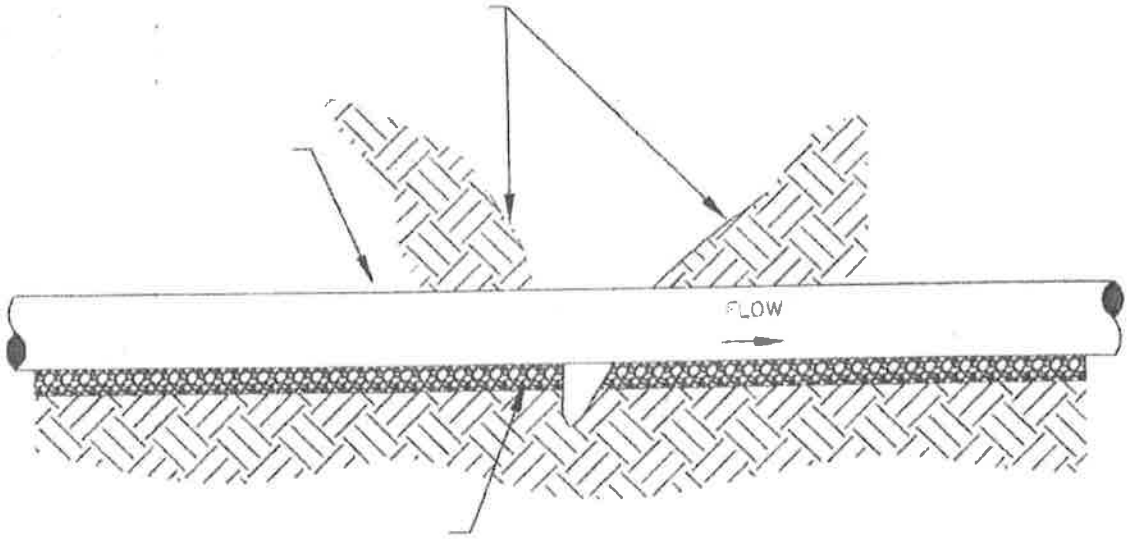

HAMILTON COUNTY WATER & WASTEWATER TREATMENT AUTHORITY
SD-CEN-6

NOTES

1. CLASS "B" CONCRETE IS TO BE POURED 36 HOURS BEFORE PLACING BACKFILL, AND IN A MANNER THAT PREVENTS FLOATING THE PIPE.
2. CONCRETE ENCASEMENT IS REQUIRED FOR DITCHES AND CREEKS WHERE THE COVER IS 2'-6" OR LESS.

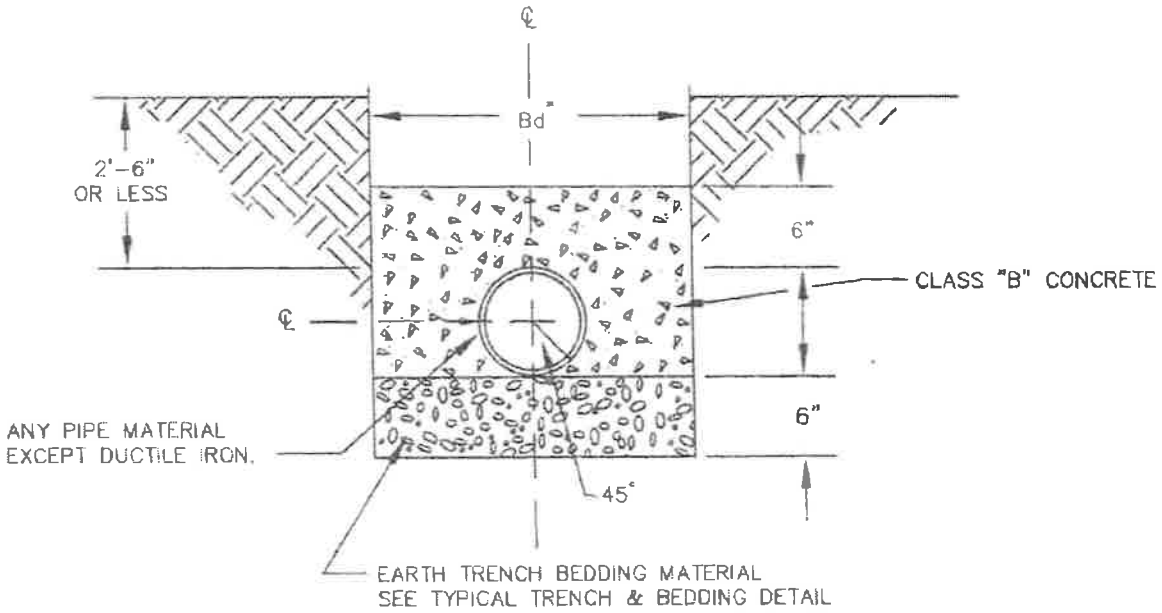

Bd* – SEE SD-GEN-1

CONCRETE CAP FOR SHALLOW PIPE

HAMILTON COUNTY WATER & WASTEWATER TREATMENT AUTHORITY

SD-GEN-7

GENERAL REQUIREMENTS

1. ALL STREET CUTS MUST BE REPAIRED IMMEDIATELY AFTER BACKFILLING AND ACCORDING TO THIS STANDARD.
2. A ROAD CUT PERMIT AND AN APPROVED TRAFFIC CONTROL PLAN ARE REQUIRED FOR ALL CUTS IN STREETS.
3. WHERE LONGITUDINAL CUTS ARE MADE, THE OWNER RESERVES THE RIGHT TO REQUIRE ADDITIONAL RESURFACING BEYOND THE LIMITS OF THE REPAIR TO ENSURE THE PROPER RIDING CHARACTERISTICS AND THE STABILITY OF THE PAVEMENT.

DRAWING NOTES

(1) 2" MINIMUM THICKNESS COLD MIX ASPHALT
WHEN A TEMPORARY ASPHALT PATCH IS USED, IT SHALL BE PLACED IMMEDIATELY AFTER THE CRUSHED STONE BACKFILL IS PLACED.

(2) MINERAL AGGREGATE BASE, TYPE A, GRADING D (33-P*)
COMPACTED IN 8" LIFTS AND TO A DENSITY OF 95% STANDARD PROCTOR.

(3) BEDDING MATERIAL – SEE SD-GEN-1

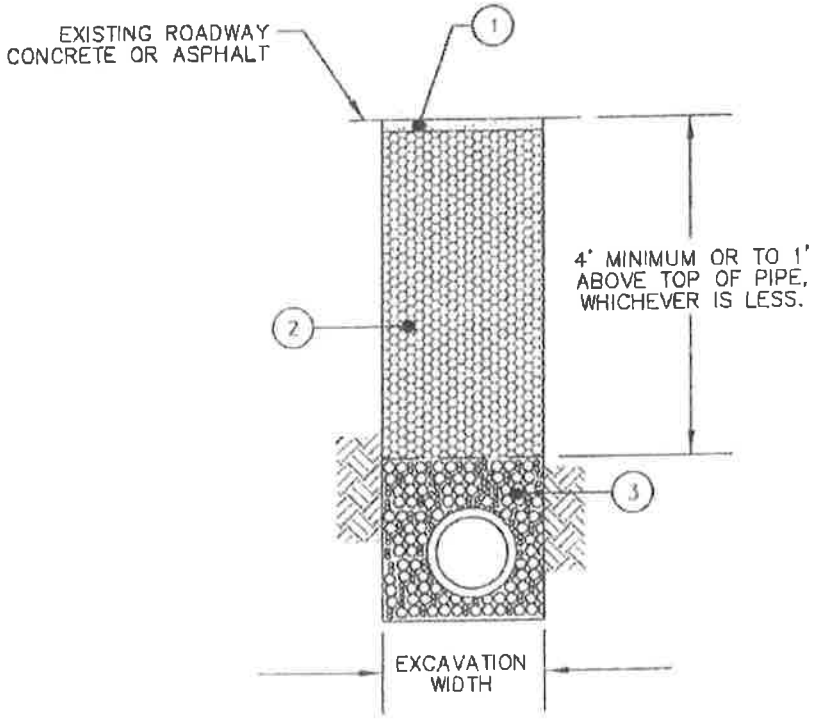

TEMPORARY PAVEMENT REPAIR

HAMILTON COUNTY WATER & WASTEWATER TREATMENT AUTHORITY

SD-GEN-8

GENERAL REQUIREMENTS

1. ALL STREET CUTS MUST BE REPAIRED IMMEDIATELY AFTER BACKFILLING AND ACCORDING TO THIS STANDARD.
2. A ROAD CUT PERMIT AND AN APPROVED TRAFFIC CONTROL PLAN ARE REQUIRED FOR ALL CUTS IN STREETS.
3. WHERE LONGITUDINAL CUTS ARE MADE, THE OWNER RESERVES THE RIGHT TO REQUIRE ADDITIONAL RESURFACING BEYOND THE LIMITS OF THE REPAIR TO ENSURE THE PROPER RIDING CHARACTERISTICS AND THE STABILITY OF THE PAVEMENT.

DRAWING NOTES

(1) CLASS "A" CONCRETE PAVEMENT (4,000 PSI MINIMUM), 8" MINIMUM THICKNESS, COARSE BROOM FINISH THE CONCRETE SHALL BE COLORED AND STAMPED TO MATCH THE ADJACENT CONCRETE AS REQUIRED.

(2) MINERAL AGGREGATE BASE, TYPE A, GRADING D (33-P*) COMPACTED IN 8" LIFTS AND TO A DENSITY OF 95% STANDARD PROCTOR.

(3) BEDDING MATERIAL - SEE SD-GEN-1

(4) MINERAL AGGREGATE BASE, TYPE A, GRADING D (33-P*) COMPACTED TO A DENSITY OF 95% STANDARD PROCTOR. THE THICKNESS SHALL BE THE GREATER OF 4' OR THE EXISTING DEPTH OF BASE MATERIAL.

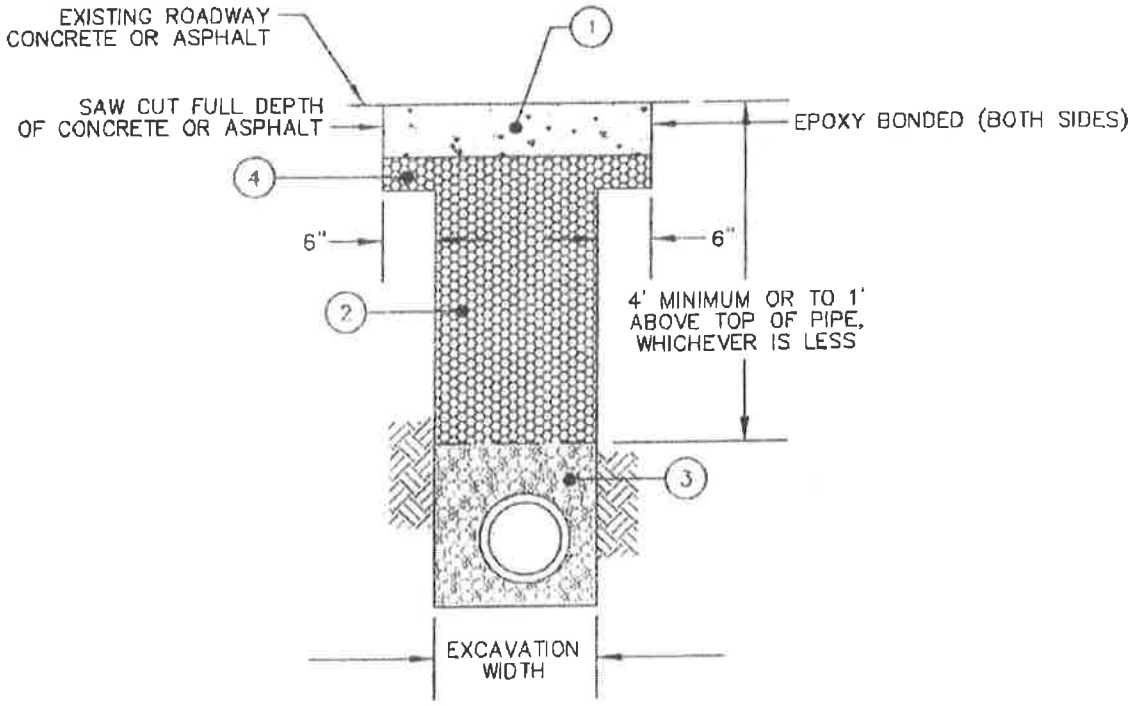

TRENCH WIDTH PAVEMENT REPAIR

HAMILTON COUNTY WATER & WASTEWATER TREATMENT AUTHORITY

SD-GEN-9

GENERAL REQUIREMENTS

1. ALL STREET CUTS MUST BE REPAIRED IMMEDIATELY AFTER BACKFILLING AND ACCORDING TO THIS STANDARD.
2. A ROAD CUT PERMIT AND AN APPROVED TRAFFIC CONTROL PLAN ARE REQUIRED FOR ALL CUTS IN STREETS.
3. WHERE LONGITUDINAL CUTS ARE MADE, THE OWNER RESERVES THE RIGHT TO REQUIRE ADDITIONAL RESURFACING BEYOND THE LIMITS OF THE REPAIR TO ENSURE THE PROPER RIDING CHARACTERISTICS AND THE STABILITY OF THE PAVEMENT.

DRAWING NOTES

(1) ASPHALTIC CONCRETE SURFACE COURSE
1-1/2" THICK, GRADING "E", TDOT SPECIFICATION SECTION 411

(2) MINERAL AGGREGATE BASE, TYPE A, GRADING D (33-P*)
COMPACTED IN 8" LIFTS AND TO A DENSITY OF 95% STANDARD PROCTOR.

(3) BEDDING MATERIAL – SEE SD-GEN-1

(4) BINDER COURSE
2" THICK, GRADING "B", TDOT SPECIFICATION SECTION 402

(5) BITUMINOUS TACK COAT
0.05 GAL./SY, TDOT SPECIFICATION SECTION 402

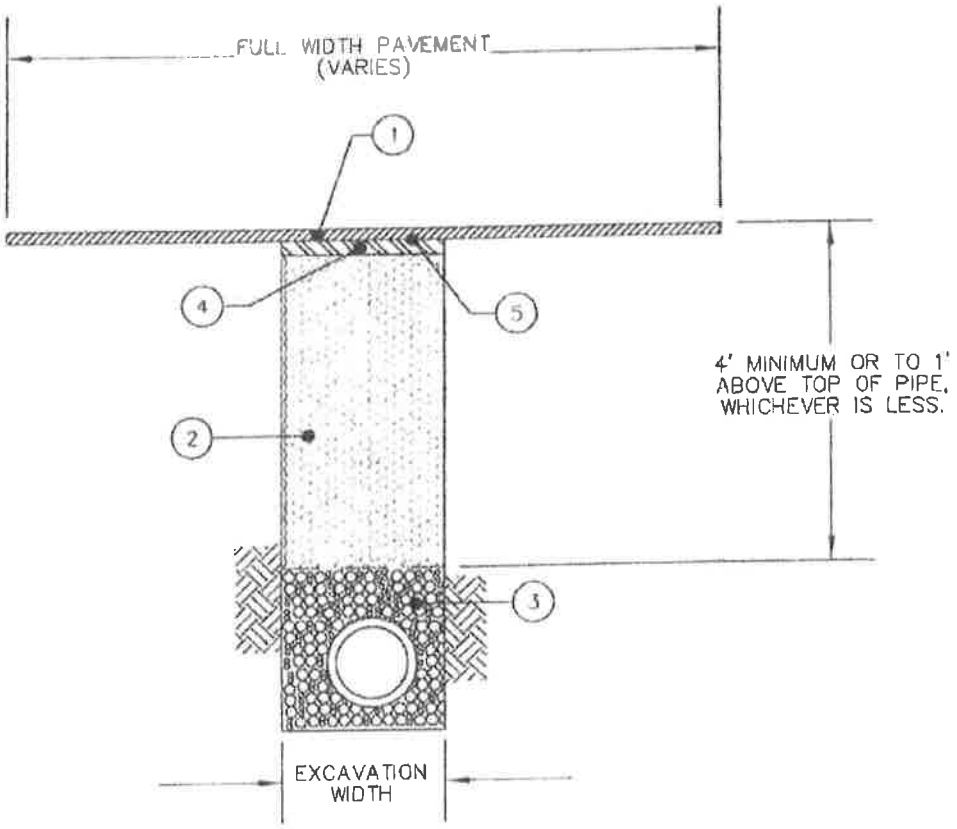

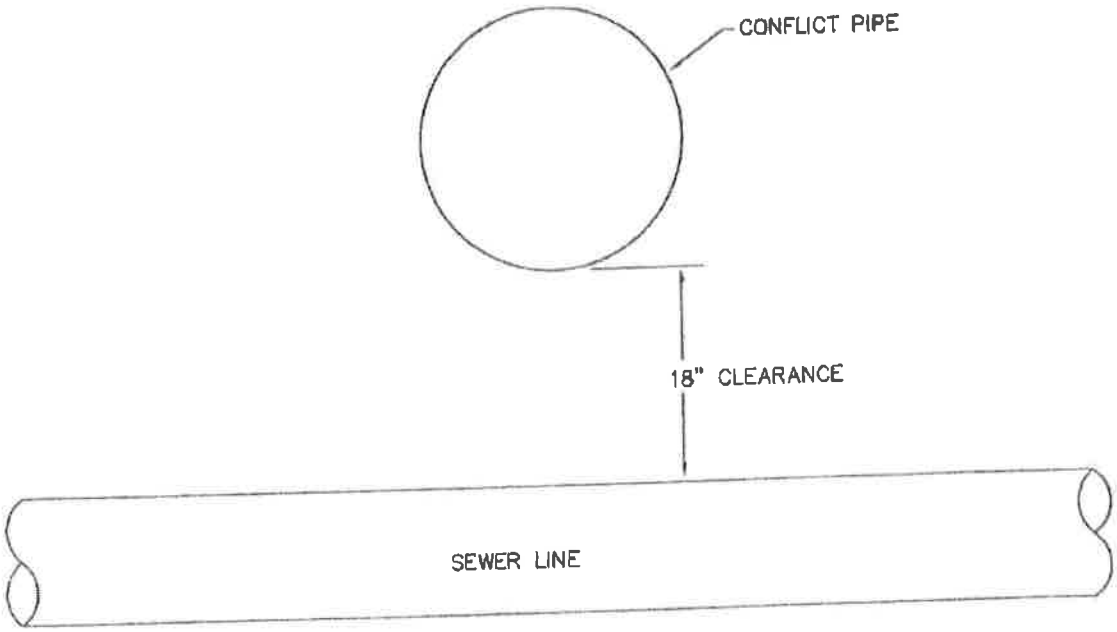

THERE SHALL BE A MINIMUM OF 18" CLEARANCE BETWEEN THE BOTTOM OF THE CONFLICT PIPE AND THE TOP OF THE SEWER LINE.

NOTES

1. FOR GRAVITY SYSTEMS, IF LESS THAN 18", USE DUCTILE IRON PIPE. DUCTILE IRON PIPE WILL EXTEND FROM MANHOLE TO MANHOLE, AND WILL NOT BE TRANSITIONED WITH MECHANICAL JOINTS.

2. IF PIPE IS COVERED BY 14' OR MORE, USE DUCTILE IRON PIPE. DUCTILE IRON PIPE WILL EXTEND FROM MANHOLE TO MANHOLE, AND WILL NOT BE TRANSITIONED WITH MECHANICAL JOINTS.

CONFLICT PIPE

HAMILTON COUNTY WATER & WASTEWATER TREATMENT AUTHORITY

SD-GEN-11

SERVICE CONNECTIONS LESS THAN 10' DEEP

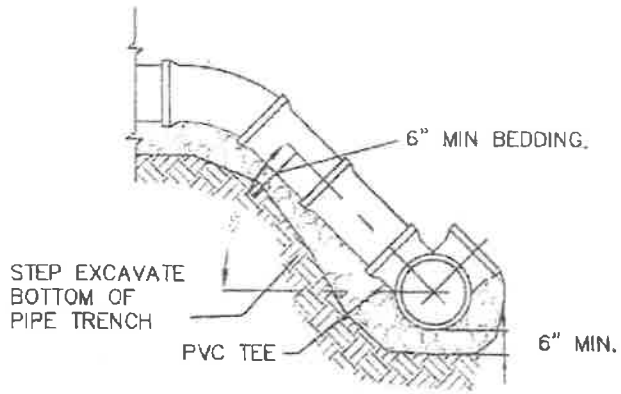

NOTES

ALL TEES SET AT MINIMUM OF 5' SPACING.

*33-P (PUG) – 303.01, TYPE A, GRADING D ("33-P") TDOT SPECIFICATIONS.

SERVICE CONNECTIONS BETWEEN 10' AND 14' DEEP

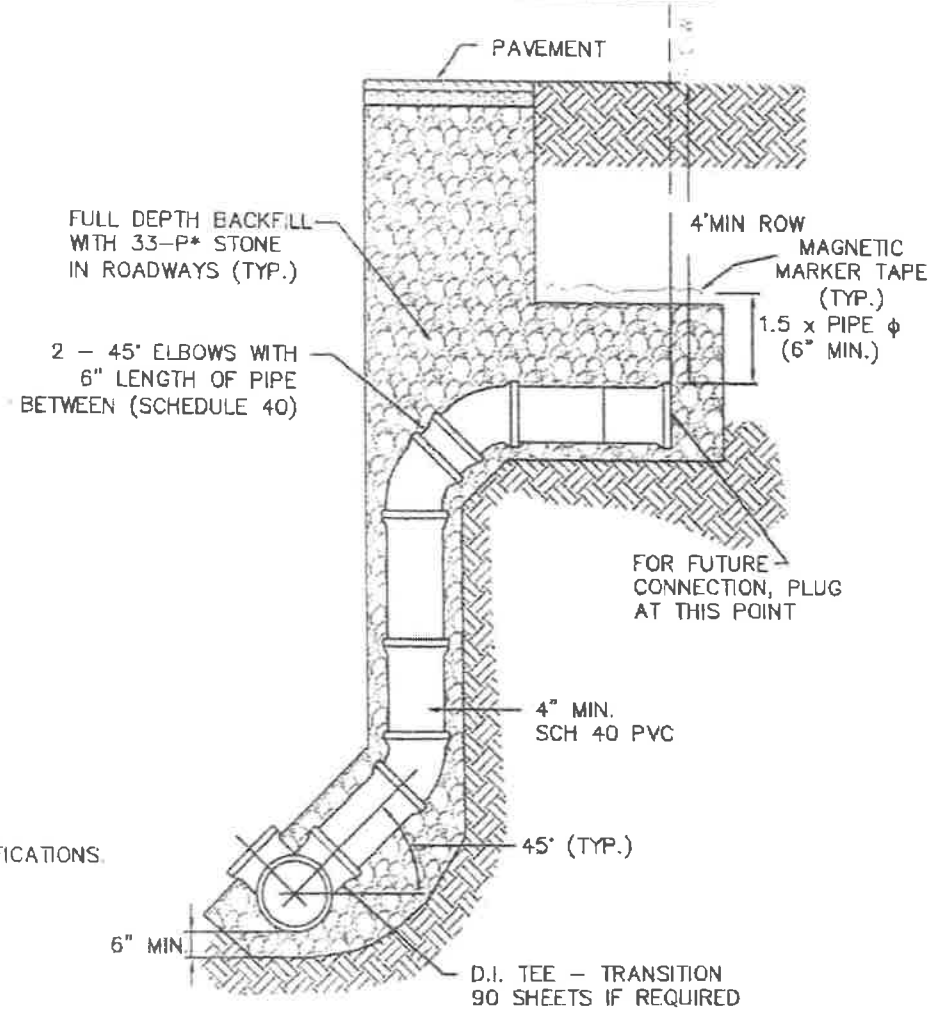

SERVICE CONNECTION LESS THAN 14' DEEP

HAMILTON COUNTY WATER & WASTEWATER TREATMENT AUTHORITY

SC-CEN-12

SERVICE CONNECTIONS GREATER THAN 14' DEEP

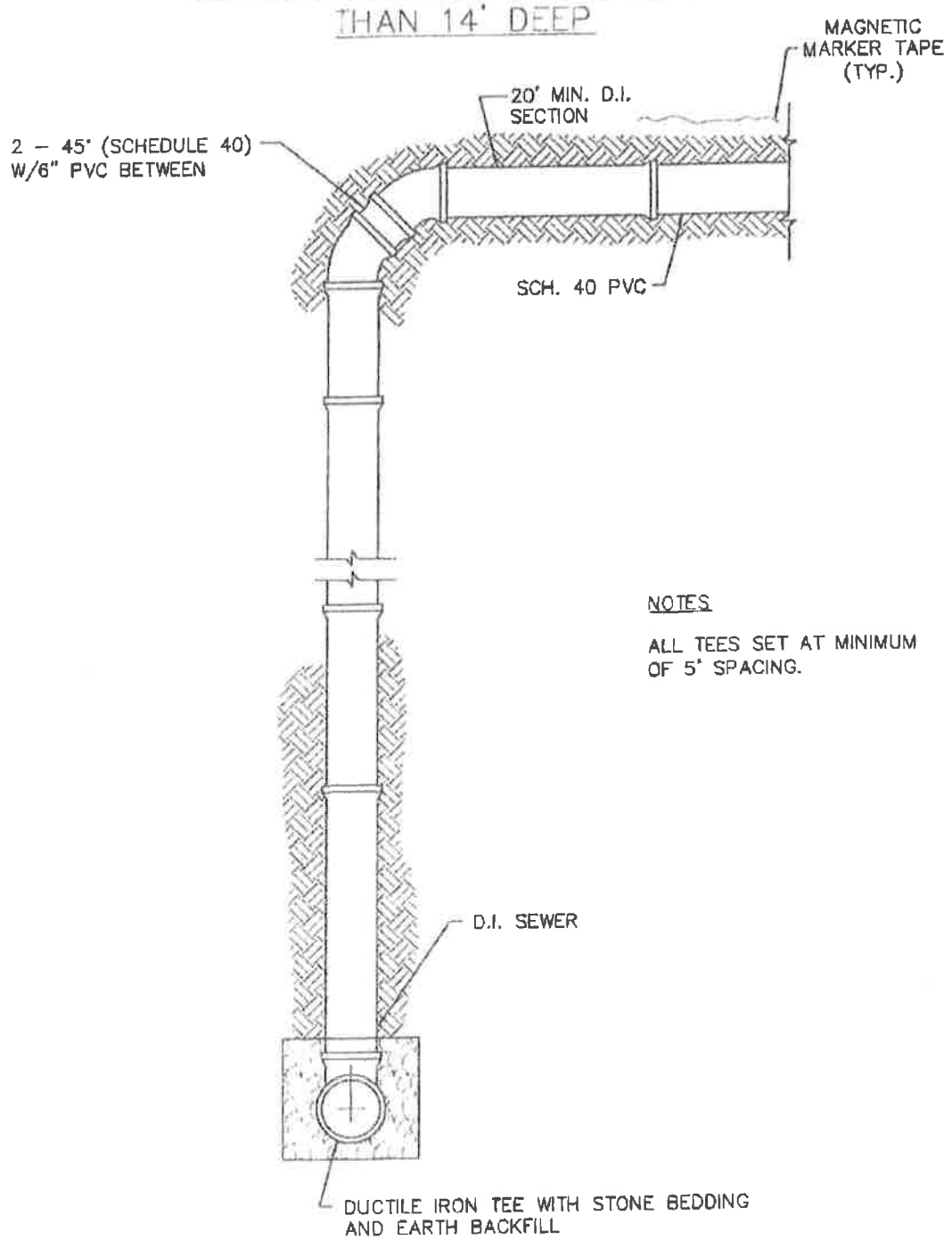

NOTES

ALL TEES SET AT MINIMUM OF 5' SPACING.

SERVICE CONNECTION GREATER THAN 14' DEEP

HAMILTON COUNTY WATER & WASTEWATER TREATMENT AUTHORITY

SD-GEN-13

NOTES

1. CONTRACTOR IS RESPONSIBLE FOR MEETING ANY AND ALL TOSHA REQUIREMENTS.
2. EXCAVATED AREAS SHALL BE 20' MINIMUM WIDTH, 2:1 MAXIMUM SIDE SLOPES.

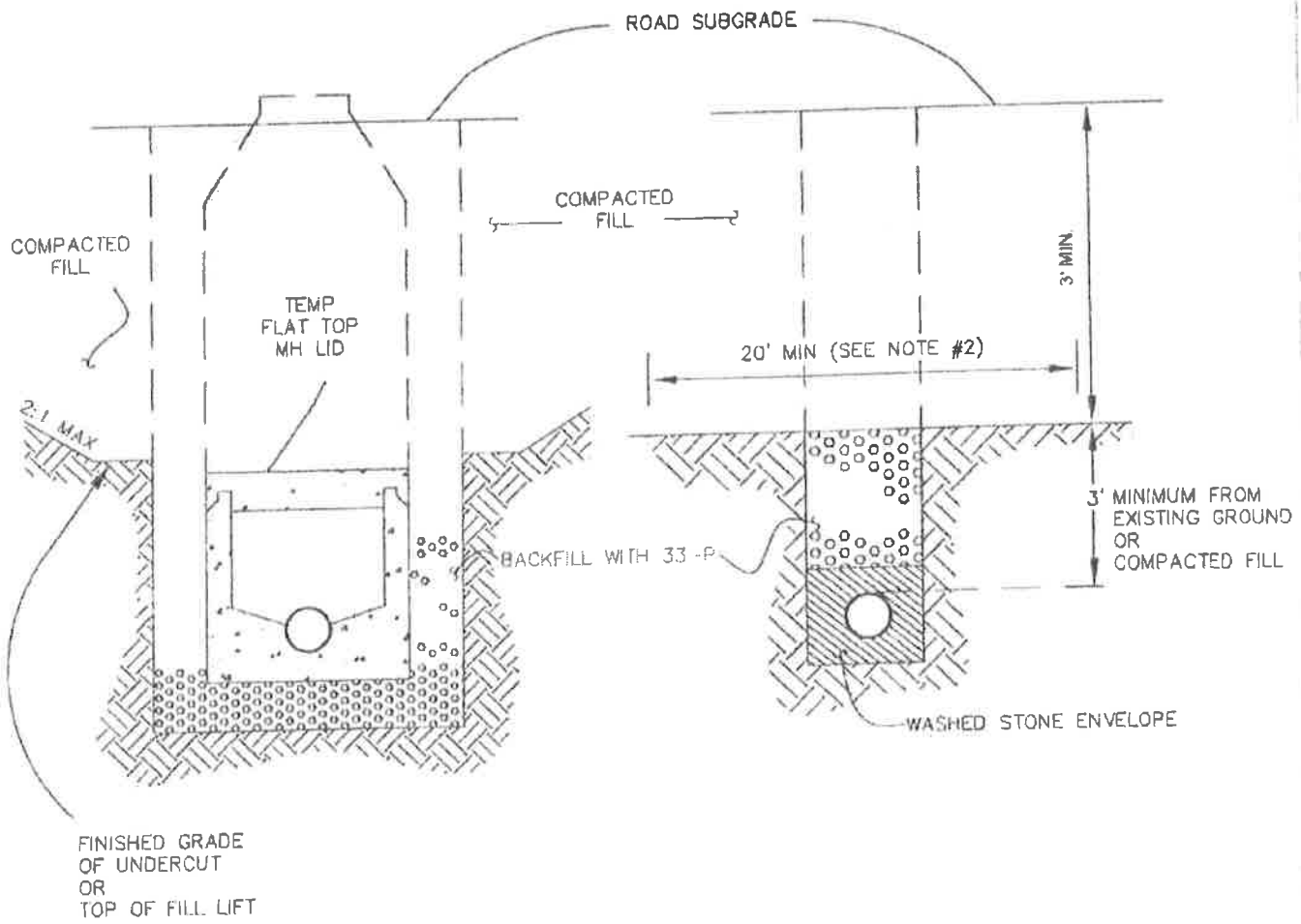

INSTALLATION OF SEWERS IN PROPOSED ROADWAYS

HAMILTON COUNTY WATER & WASTEWATER TREATMENT AUTHORITY

SD-GEN-14

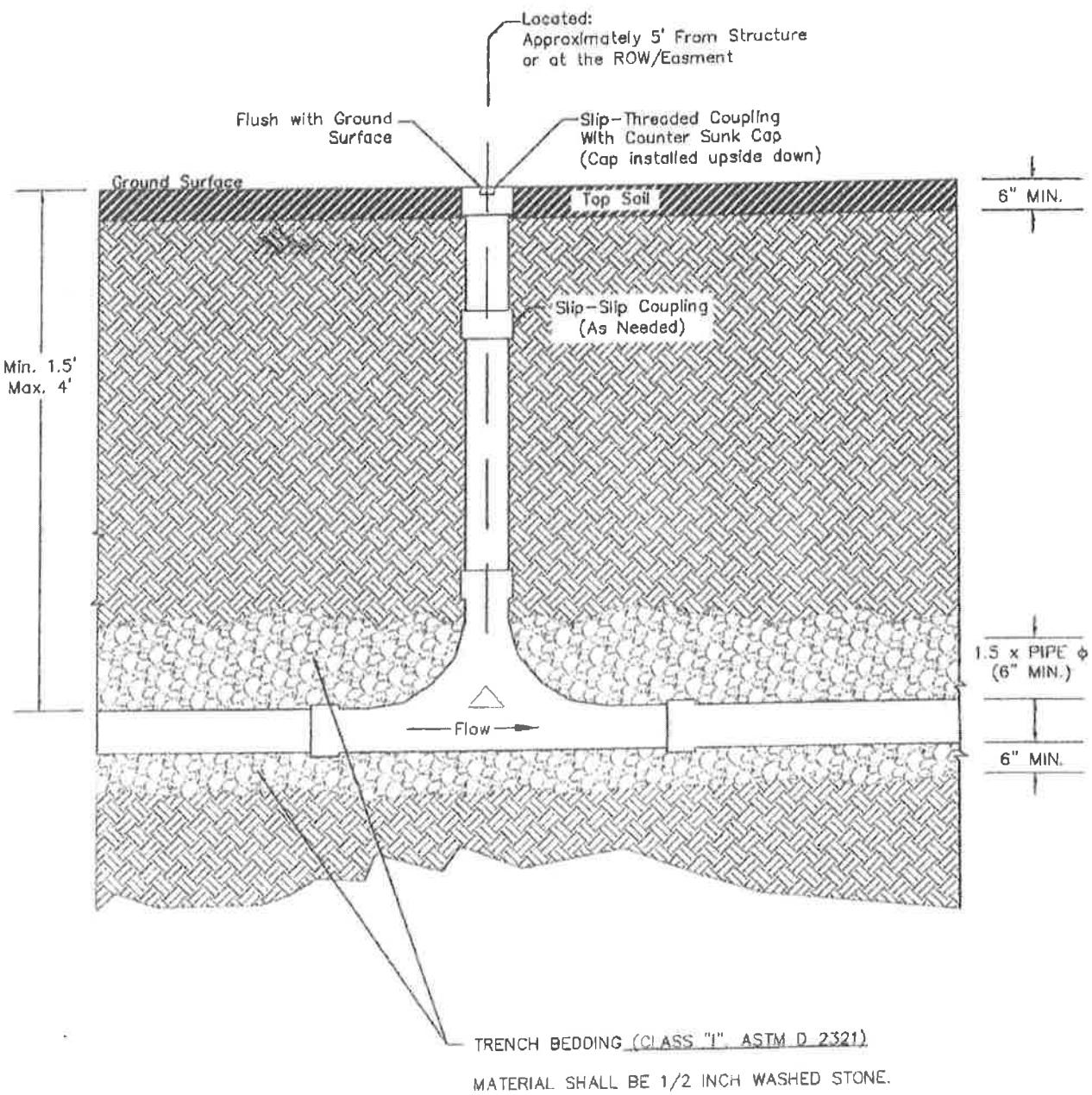

SERVICE CONNECTION
SHALLOW CLEANOUT (TYPICAL)

HAMILTON COUNTY WATER & WASTEWATER TREATMENT AUTHORITY
SD-GEN-15

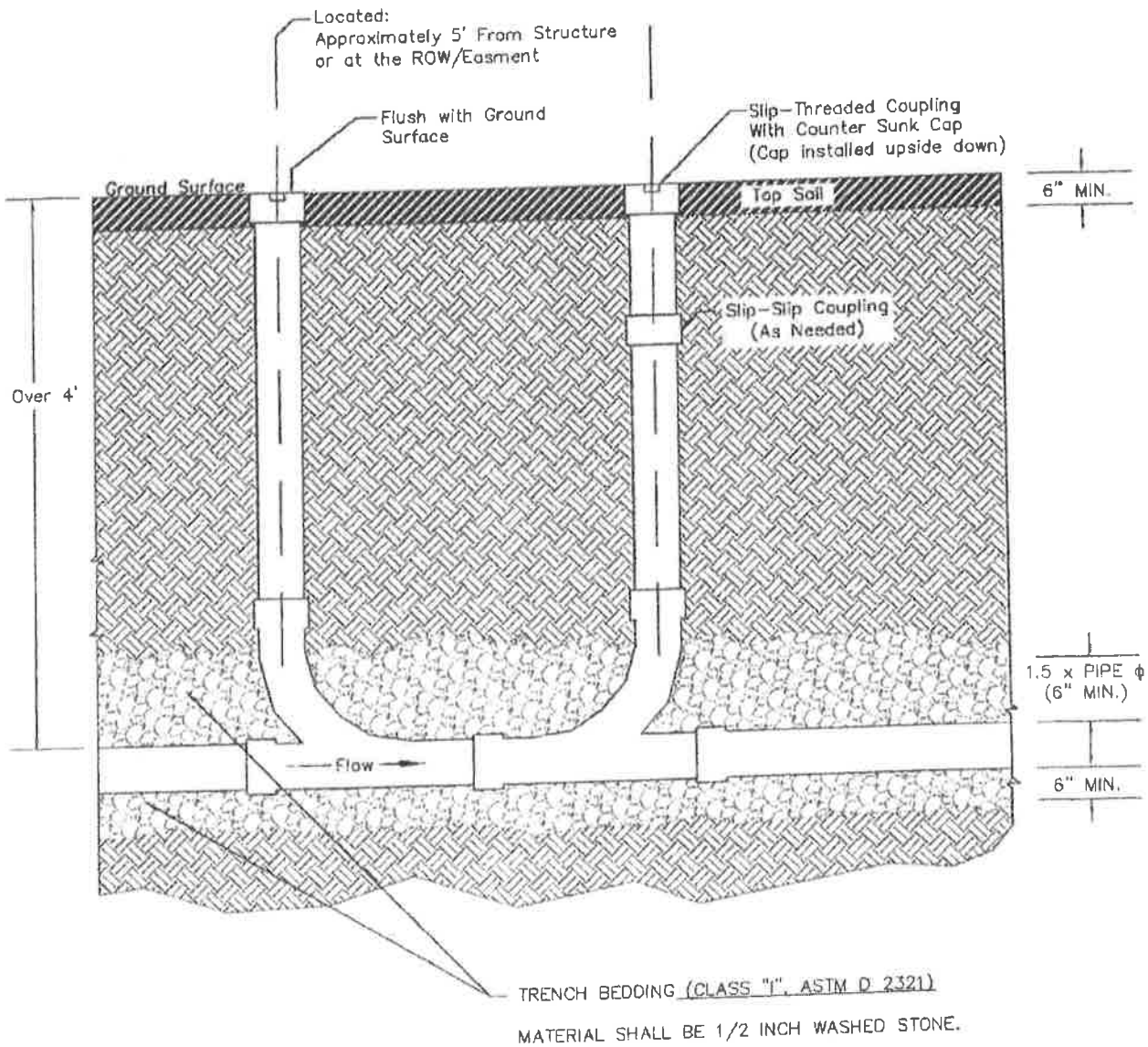

Note: The sweeps should constructed to avoid a "blind spot" in the lateral.

SERVICE CONNECTION
DEEP CLEANOUT (TYPICAL)

HAMILTON COUNTY WATER & WASTEWATER TREATMENT AUTHORITY
SD-CEN-16

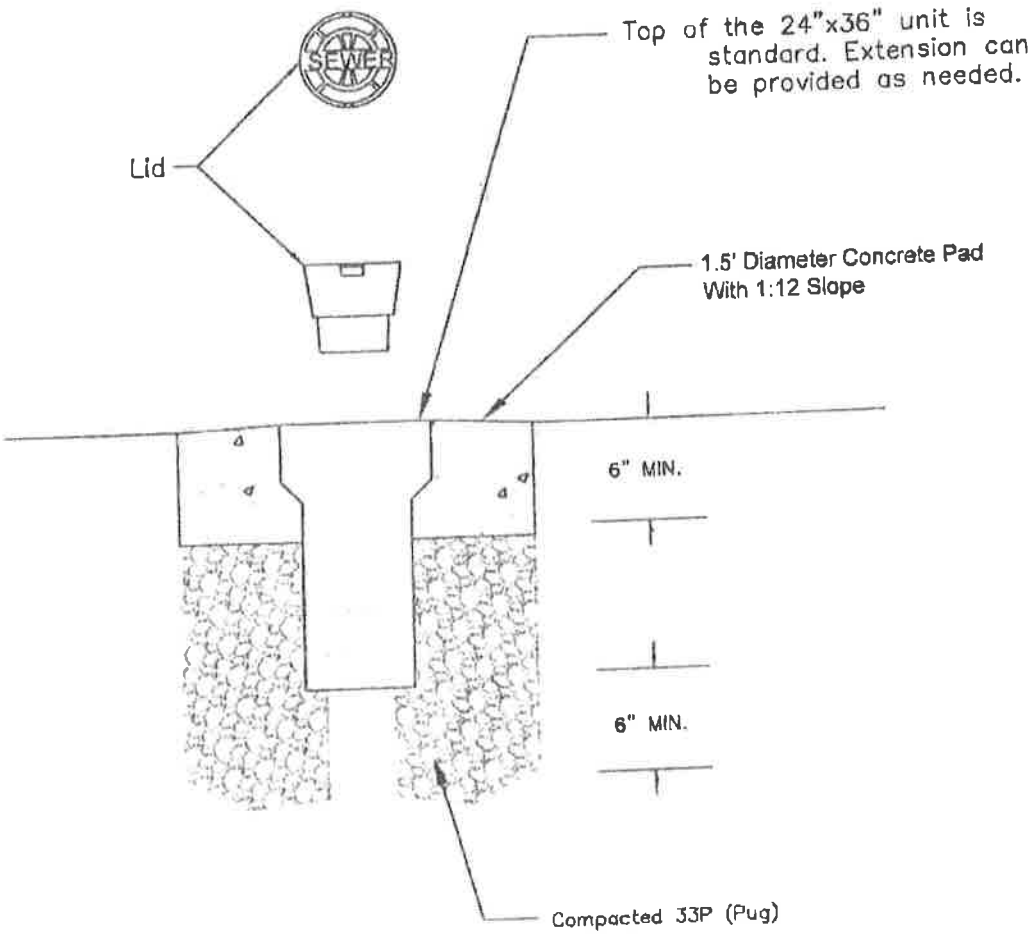

Note: This detail is used for cleanouts required at drives and roadways. If the cleanout can be shifted to avoid a driveway or roadway, it should be.

CAST IRON TWO-PIECE ADJUSTABLE VALVE BOX (TYPICAL)

HAMILTON COUNTY WATER & WASTEWATER TREATMENT AUTHORITY
SD-GEN-17

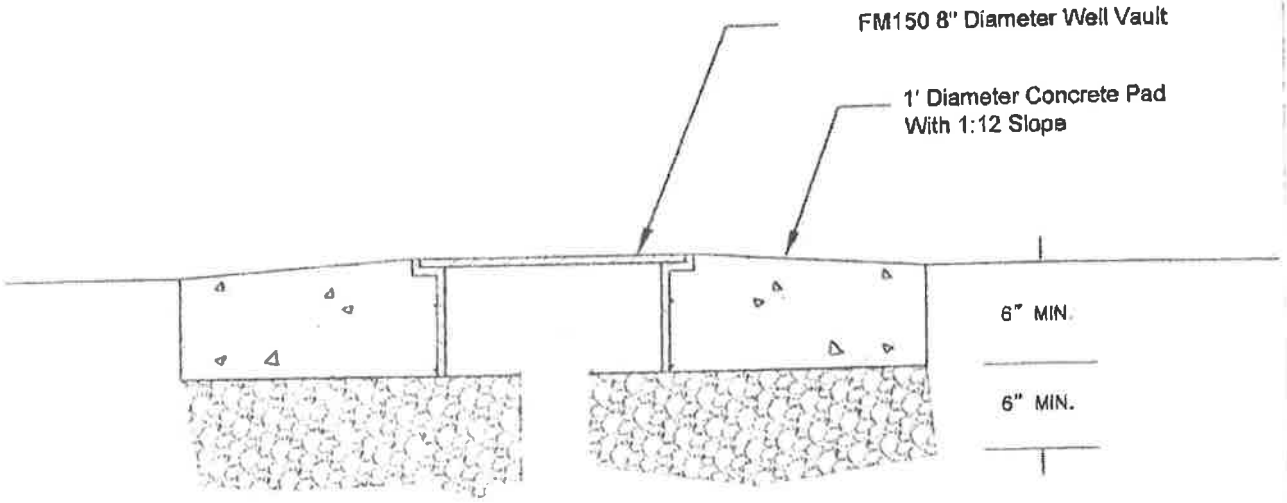

MANHOLE
VALVE BOX (TYPICAL)

HAMILTON COUNTY WATER & WASTEWATER TREATMENT AUTHORITY
SD-GEN-18